felicitysolar®

Make life full of hope

USER MANUAL

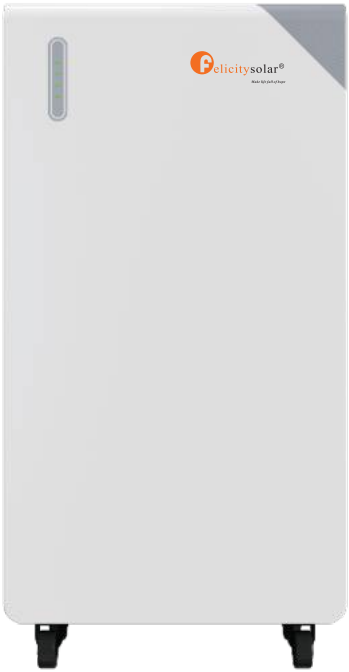

Model

FLB48314TG1-H

51.2V/16kWh

www.felicitysolar.com

Contents

1. Safety Introductions 1

1.1 Warning 1

1.1.1 Before Connecting 1

1.1.2 In Using 1

1.1.3 Battery Pack Case Overheating Warning 1

1.2 Caution 2

2. Transportation 3

3. Introductions 4

3.1 Symbol Definition 4

3.2 Brief Introduction 4

3.3 Features 5

3.4 Product Overview 5

3.4.1 External Packaging 5

3.4.2 Product Appearance Display 5

3.5 LCD Display Icons 7

3.5.1 ON/OFF or SOC Led(Mode or SOC) 7

3.6 Battery Management System(BMS) 8

3.7 System Connection Diagram 8

4. Installation and Configuration 9

4.1 Preparations for Installation 9

4.1.1 Safety Requirement 9

4.1.2 Installation Environment 9

4.1.3 Tools 10

4.2 Unpacking Inspection 10

4.3 Installation Procedure 12

4.3.1 Mounting the Battery 12

4.3.2 Batteries in parallel 15

4.3.3 Series connection is not allowed 16

5. Operation 16

5.1 Description of Communication Port 16

5.2 Switch On/Off 17

6. Manage Devices Via Network.....18
6.1 Configure Network.....18
6.1.1 Download APP.....18
6.1.2 Connect to Built-in WIFI wireless network.....18
6.1.3 Configure the network.....19
6.2 Create the Plant.....20
6.2.1 Manage devices via APP.....20
7. Maintenance and Troubleshooting.....21
7.1 Storage.....21
7.2 Maintenance Troubleshooting.....22
7.2.1 Analysis and Treatment of Common Faults.....22
7.2.2 Fault Code.....23
8. Battery recovery.....23
8.1 Recovery process and steps of cathode materials.....23
8.2 Recovery of anode materials.....23
8.3 Recovery of diaphragm.....23
8.4 List of recycling equipment.....23
Appendix I.....24

Revision History

Revision NO.	Revision Date	Revision Reason
1.0	2025.9	First Published

About This Manual

The manual mainly describes the introduction, installation, operation, and maintenance. Please read this manual carefully before installation and operation. Keep this manual for future reference.

How to Use This Manual

Please read this manual and all relevant documents thoroughly before carrying out any operations on the battery. Ensure that the documents are stored securely and remain accessible at all times. The content may be periodically revised or updated to reflect product improvements.

1. Safety Introductions

1.1 Warning

1.1.1 Before Connecting

- After unpacking, inspect the product and packing list carefully. If any damage is found or parts are missing, please reach out to your local retailer for assistance.
- Before starting the installation, disconnect the grid power and confirm that the battery is turned off.
- Ensure proper wiring by connecting the positive and negative cables correctly and avoiding any short circuits with external devices.
- Directly connecting the battery to AC power is strictly prohibited.
- The battery system must be properly grounded, with a grounding resistance of less than 1Ω.
- Verify that the electrical parameters of the battery system are fully compatible with the connected equipment.

1.1.2 In Using

- If the battery system needs to be moved or serviced, ensure that the power is disconnected and the battery is fully powered down.
- Connecting the battery with a different type of battery is strictly prohibited.
- Do not operate the batteries with a faulty or incompatible inverter.
- Disassembling the battery is not allowed.
- In the event of a fire, only dry powder fire extinguishers should be used; liquid fire extinguishers must not be used.
- Please refrain from opening, repairing, or disassembling the battery unless performed by Felicitysolar staff or personnel authorized by Felicitysolar. Any consequences or responsibilities arising from improper operation or violations of design, manufacturing, or equipment safety standards will not be assumed by us.
- Keep the battery away from water and fire.



1.1.3 Battery Pack Case Overheating Warning

In this battery pack design, the MOSFETs on the BMS board are tightly attached to the case to enable heat conduction and dissipation through the case. This design causes the case to heat up during operation. This is a normal occurrence and a natural result of the energy conversion and heat dissipation design, and it will not affect the normal performance or lifespan of the battery pack.

It is particularly important to note that the surface temperature of the case may become high. To prevent burns or other accidental injuries, do not touch the surface of the case directly. During the operation of the battery pack, please maintain a safe distance from the case, especially after prolonged use, and be extra cautious to avoid contact.

In addition, to ensure that the battery pack remains in an optimal heat dissipation state and maintains stable performance, please ensure proper ventilation around the case during use and avoid using the battery pack in enclosed, high-temperature, or poorly ventilated environments.

If you notice that the temperature of the case rises abnormally during use (such as exceeding the normal heat range, accompanied by unusual noises or smells, etc.), please stop using the battery pack immediately and contact professional technicians for inspection and maintenance. Do not attempt to disassemble or handle it yourself to avoid potential safety risks.



1.2 Caution

- Our products undergo rigorous inspection before shipment. If you notice any unusual signs, such as the device casing bulging, please contact us promptly.
- The product must be properly grounded prior to use to ensure safety.
- To ensure correct usage, verify that the parameters of the connected devices are compatible and matched. Avoid mixing batteries from different manufacturers, types, or models, as well as using old and new batteries together.
- The ambient environment and storage methods can affect the product's lifespan. Please adhere to the operating environment guidelines to ensure the device functions optimally.
- For long-term storage, recharge the battery every six months, ensuring the charge exceeds 80% of its rated capacity.
- Recharge the battery within 18 hours after it has fully discharged or when over-discharge protection mode is triggered.
- The formula for calculating theoretical standby time is: T = C/I (where T represents standby time, C is the battery capacity, and I is the total current of all loads).

2. Transportation

The battery module can only be transported in an upright position.



√



×

- Smoking is prohibited in the vehicle during transportation or in the vicinity during loading and unloading

- The dangerous goods transport vehicles shall meet relevant regulations concerning roadtransportation and shall be equipped with two tested CO2 fire extinguishers.

- If possible, do not remove the transport packaging before arrival at the installation site.Before removing the transport protector, check if the transport packaging is damaged.

- Improper transport of battery modules may cause injury. It could cause injury if it falls or slips. Use only suitable transport and lifting equipment to ensure safe transport.

- Wear safety shoes to avoid the danger of injury. When transporting the battery module,their parts may be crushed due to their heavy weight. Therefore, all persons involved in transportation must wear safety shoes with toe caps. Please observe the safety regulations for transportation at the end customer's site, especially during loading and unloading.

- During transportation and installation of unpacked battery storage cabinets, the risk of injury increases, especially on sharp metal panels. Therefore, all personnel involved in transportation and installation must wear protective gloves.

- Improper vehicle transportation can cause injury. Improper transportation or improper transportation locks may cause the load to slip or overturn,resulting in injury.

- The transportation of Li-Ion batteries is classified under hazard category UN3480, Class 9. For transport via sea, air, or land, the batteries are categorized under Packaging Group PI965 Section I. Use Class 9 Miscellaneous Dangerous Goods and UN Identification labels for transportation of lithium-ion batteries which are assigned Class 9. Please refer to the relevant transportation documentation for details.

3. Introductions

3.1 Symbol Definition

	Danger! Serious physical injury or even death may occur if not follow the relative requirements.		Install the product out of reach of children
	Caution, risk of electric shock.		Do not place nor install near flammable or explosive materials
	In case of electrolyte leakage, keep leaked electrolyte away from eyes or skin.		Disconnect the equipment before carrying out maintenance or repair
	Do not connect the Pack's positive(+) and negative(-)terminal reversely.		EU WEEE mark: Product should not be disposed as household waste.
	Observe precautions for handling electrostatic discharge sensitive devices.		Instruction manual: Read the instruction manual before starting installation and operation.
	Caution, risk of electric shock, energy storage timed discharge	CE	CE mark: The inverter complies with the CE directive.
	Recyclable.	NOTE	Note:The procedures taken for ensuring proper operation.
	Do not use the Pack beyond specified conditions		Earth terminal: The inverter must be reliably grounded.
	Take care! This Pack is heavy enough to cause serious injury.		

3.2 Brief Introduction

FLB48314TG1-H is equipped with a lithium iron phosphate battery designed for household use. Developed based on customer needs and market demands, this advanced battery storage solution provides high-quality, reliable power for various devices. The product features a long lifespan, suitability for high-temperature environments, and a compact design that requires minimal installation space.

FLB48314TG1-H features a battery management system independently developed by our team. When connected to a grid or photovoltaic system as the power source, the product can store energy by charging the battery. In the event of a power outage from the grid or photovoltaic system, the product independently supplies electricity to household loads. Additionally, multiple units can be connected in parallel to form a high-capacity, multi-module system, meeting long-term energy storage requirements.

3.3 Features

- LiFePO4: Higher safe performance and longer cycle life.
- Multiple Protection: Built-in smart BMS,Breaker and Fuse.
- Flexible Installation: Floor-Mounted.
- Wide Compatibility: Compatible with leading inverter brands.
- High Scalability: Capacity up to 512kWh.
- Built-in WFI/Bluetooth: Remote monitoring of battery pack data.
- IP65 Protection Level: Suitable for Outdoor Use.
- Equipped with an aerosol fire extinguishing system.
- When the battery experiences overcurrent causing the fuse to blow, it can be easily replaced externally, providing great convenience.

3.4 Product Overview

3.4.1 External Packaging



3.4.2 Product Appearance Display



Code	Name	Definition
A	WIFI	WIFi signal port. Connects to mobile communication ports such as phones or computers.
B	Power/Running Status	1.Indicate the power on/off function: press once to turn on, press and hold for 3 seconds to turn off; 2. ● A green light indicates normal status, ● while a red light indicates fault status. ● The yellow light flashing slowly at a frequency of 1 second indicates that it is in the heating status.
C	ON/OFF Switch	Circuit Protection
D	LED	Indicate the battery's SOC
E	Decorative Cover	Panel protection for the communication port and power port
F	POS+	The battery DC output positive pole, which is connected to the positive pole of the inverter through the cable.
G	COM	When the system operates in parallel: This CAN/RS485 communication socket connects to the COM interface using a communication cable.
H	NEG-	The battery DC output negative pole, which is connected to the negative pole of the inverter through the cable.
I	Earth Wire	Shell ground connection

3.5 LCD Display Icons

The: LED shows the SOC of module N.

				
100%	75%	50%	25%	Flashing SOC<10%

Note: The battery need to be fully charged for at least once in one month to ensure the accurate SOC calculation.

3.5.1 ON/OFF or SOC Led(Mode or SOC)

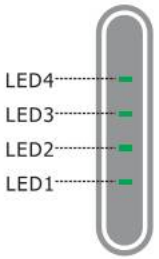

LED Definition	ON/OFF		LED Status				Fault Info
	Green LED	Red LED	LED1	LED2	LED3	LED4	
Power OFF	OFF	OFF	OFF	OFF	OFF	OFF	
Power ON	OFF	ON	ON	ON	ON	ON	
Stand By	OFF	OFF	SOC				SOC<10%(Default):LED1 Flash
Normal	ON	OFF	Running/SOC				SOC<10%(Default):LED1 Flash
Discharge	ON	OFF	SOC				SOC<10%(Default):LED1 Flash
Charge	Flash	OFF	Running				
Low Power	Flash	OFF	OFF				
Fault	OFF	ON	ON	OFF	OFF	OFF	Battery Voltage High
			OFF	ON	OFF	OFF	Battery Voltage Low
			ON	ON	OFF	OFF	Cell Voltage High
			OFF	OFF	ON	OFF	Cell Voltage Low
			ON	OFF	ON	OFF	Charging Current High
			OFF	ON	ON	OFF	Discharging Current High
			ON	ON	ON	OFF	BMS Temperture High
			OFF	OFF	OFF	ON	BMS Temperature Low
			ON	OFF	OFF	ON	Cell Temperture High
			OFF	ON	OFF	ON	Cell Temperature Low
			ON	ON	OFF	ON	Current Sensor Abnomal

3.6 Battery Management System(BMS)

Voltage Protection

Low Voltage Protection in Charging:

When the voltage of any battery cell or the total voltage falls below the rated protection value during discharging, over-discharging protection is activated, and the battery system stops supplying power externally. Once the voltage of each cell returns to the rated range, the protection is released.

Over Voltage Protection in Charging:

During charging stage, the system will stop charging when the total voltage of the battery pack is higher than rated value or the voltage of any single cell reaches the protection value. When total voltage or all cell back to rated range, the protection is over.

Current Protection

Over Current Protection in Charging:

When the charging current reaches the trigger value and lasts for 15 seconds, charging overcurrent protection is activated, entering fault mode. The battery disables both charging input and discharging output, and displays fault code C05 on the screen. The fault is automatically cleared after 1 minute. After 10 occurrences, the fault can no longer clear automatically, requiring a manual battery restart.

Over Current Protection in Discharging:

When the discharging current reaches the trigger value and lasts for 15 seconds, discharging overcurrent protection is activated, entering fault mode. The battery disables both charging input and discharging output, and displays fault code C06 on the screen. The fault is automatically cleared after 1 minute. After 10 occurrences, the fault can no longer clear automatically, requiring a manual battery restart.

3.7 System Connection Diagram

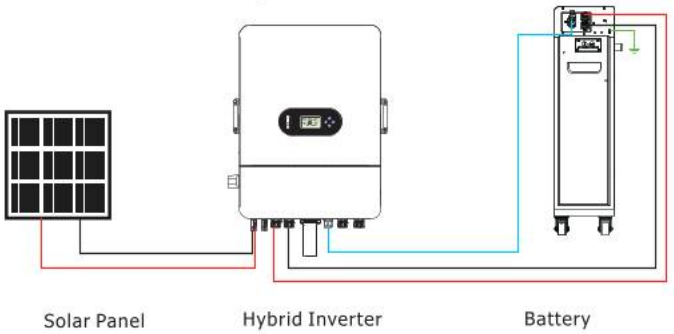

Figure 3-1 Single Battery System Connection Diagram

When paralleling multiple battery packs, please use a combiner box or a copper busbar.

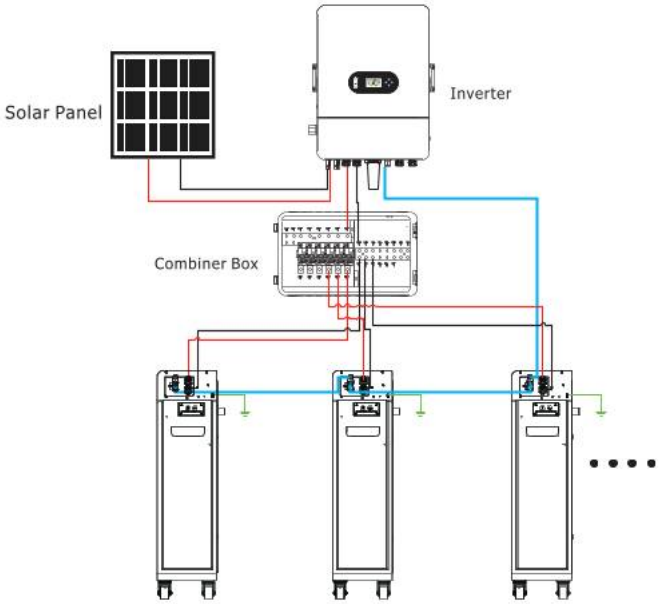

Figure 3-2 Multiple Battery Parallel System Connection Diagram

4. Installation and Configuration

4.1 Preparations for Installation

4.1.1 Safety Requirement

This system must only be installed by personnel trained in power supply systems and possessing adequate knowledge of such systems.

The safety guidelines outlined below, along with applicable local safety standards, must be strictly adhered to during installation.

- All circuits interfacing with this power system and carrying external voltages below 48V must comply with SELV requirements as specified in the IEC60950 standard.
- If working within the power system cabinet, ensure the system is completely powered down, and all battery devices are switched off.
- The distribution cables should be arranged systematically and equipped with protective measures to prevent accidental contact while operating power equipment.

4.1.2 Installation Environment

- Working temperature: -20℃~+55℃
- Charging temperature range: -20℃~+55℃
- Discharging temperature range: -20℃~+55℃
- Storage temperature: 0℃~+35℃
- Relative humidity: 5% ~ 95%
- Elevation: ≤2000m

Operating environment: Suitable for indoor and outdoor installation at locations shielded from direct sunlight, wind, conductive dust, and corrosive gases.
Ensure the following conditions are met:

- The installation site should be distant from the sea to prevent exposure to saltwater and high humidity.
- The ground at the installation location must be flat and level.
- The site should be free of flammable or explosive materials.
- Optimal ambient temperature: 20°C to 30°C.
- Avoid areas with excessive dust or clutter.

4.1.3 Tools


Screw Driver


Crimping Modular


Safety Shoes


Multimeter


Safety Gloves


Safety Goggles


Plier


Ribbon


Electric drill

4.2 Unpacking Inspection

- Upon arrival at the installation site, loading and unloading should strictly follow the established rules and procedures to prevent exposure to sunlight and rain.
- Before unpacking, verify the total number of packages against the shipping list attached to each package, and inspect the outer cases for any signs of damage. After unpacking, carefully check for loose or damaged wiring and contacts, cracks, deformations, leaks, or any other form of damage. If any damage is detected, the battery must be replaced immediately. Do not attempt to charge or use a damaged battery, and avoid contact with any liquid from a ruptured battery.
- During unpacking, handle all components with care to protect the surface coating from damage.

No.	Description	Quantity	Picture
1	User Manual	1	
2	Warranty Card	1	
3	Quick Installation Guide	1	
4	Lock Wall Components: Used for product wall fixation	2	
5	Power Cable:50mm², allows for charging and discharging up to 160A, used for connecting to external PCS	2	
6	Communication Cable:Gray, used for RS485 communicationwith Felicity inverters (Model:IVCM,IVEM,IVPS/M IVGM)	1	
7	Communication Cable: Blue, Used for communication with inverters from other brands.	1	
8	Communication Cable: Black,used for parallel communication between battery packs	1	
9	Expansion tube 8X40*2 PCS Screws M5X25*2 PCS Screws M5X12*4 PCS	/	
10	Signal Terminal: Used for creating custom communication cables	2	
11	Ribbon: Used to fix the power cable	3	
12	Fuse: Spare parts for repair and replacement in case of fuse damage	1	

4.3 Installation Procedure

4.3.1 Mounting the Battery

(a) Wall-Mounted method

Step 1: Use sheet metal lock wall components to fix the product on the wall

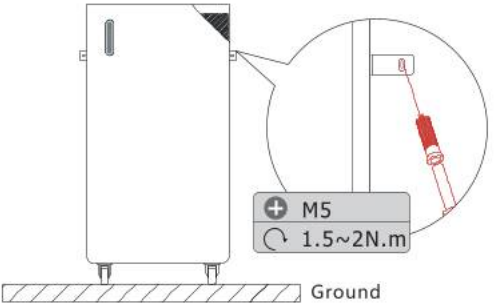

Note:

1. Do not use wall mounted components, place the chassis against the wall and secure it with fixing components
2. If the fuse is blown, please follow the steps below:
   Step 1: Use a Phillips-head screwdriver to remove the screws from the fuse cover.
   Step 2: Open the fuse cover, remove the old fuse, and replace it with the new one.
   Step 3: Reattach the fuse cover and secure it in place.

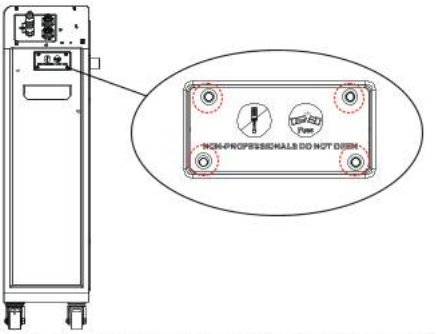

Fuse(Non professionals are not allowed to open this cover)

(b) Floor-Mounted method

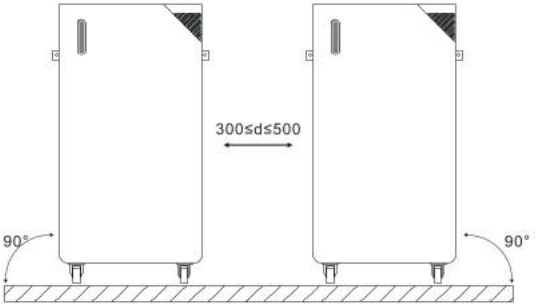

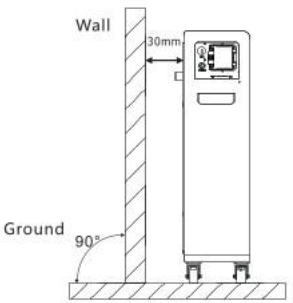

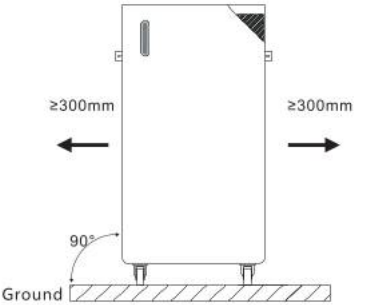

(c) Install and remove decorative cover

• Before wiring: Remove the screws on the side of the protective cover and slide the cover forward to begin wiring.

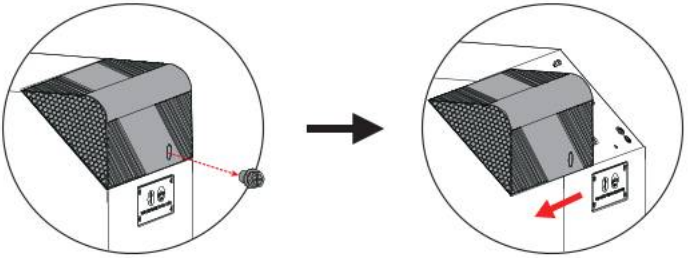

• After wiring is complete: Slide the protective cover back into the designated position and tighten the screws that were removed.

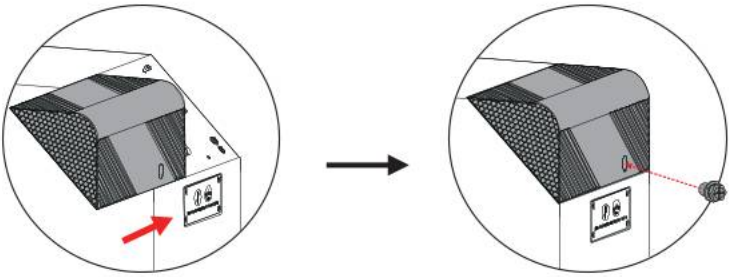

4.3.2 Batteries in parallel

The FLB48314TG1-H series battery support to be connected in parallel for expansion. If you need one more battery bank to work in parallel mode, connect the battery as shown in Figure 1.

* It is recommended to use battery pack combiner box(BTCB0606/BTCB0303) or confluence copper bar confluence.

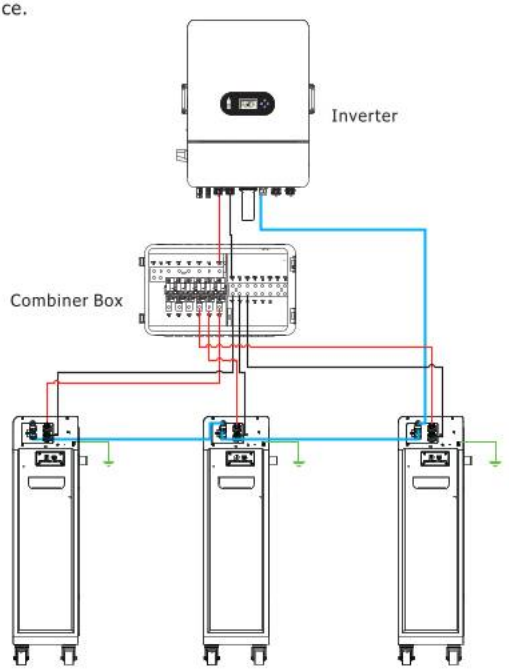

Figure 4-1 The parallel connection of three battery packs

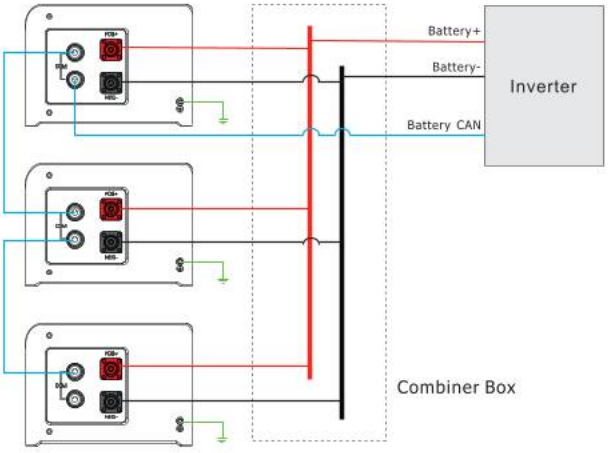

4.3.3 Series connection is not allowed

1)The batteries can be connected in parallel. Series connection is not allowed.Use in upright position only.

2)The batteries are not allowed to connected with PWM controller for chargingSpecial Attention: Due to the built-in protection board of the lithium battery pack is with over-discharge protection function, it is strongly recommended to stop using the load when the battery pack is over-discharged. The battery pack cannot be repeatedly activated fordis charge. Or the battery may be failed to be activated by the AC or PV activation cable It requires a special charging activation method), so cannot be charged. Therefore, when the battery pack is low power, please charge the battery as soon as possible when main power or solar energy is available.

5. Operation

5.1 Description of Communication Port

BATTERY-Felicitysolar

Picture	Pin	Color	Definition
P1.....P8 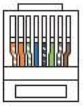	1	ORG-WH	CAN-GND
	2	ORG	+5V-BUS
	3	GN-WH	CANL-PCS
	4	BU	CANH-PCS
	5	BU-WH	RS485-B
	6	GN	RS485-A
	7	BN-WH	CANL
	8	BN	CANH



INVERTER

Pin	Color	Definition	Picture
1	ORG-WH	/	P1.....P8 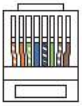
2	ORG	/	
3	GN-WH	CANL-PCS	
4	BU	CANH-PCS	
5	BU-WH	RS485-B	
6	GN	RS485-A	
7	BN-WH	/	
8	BN	/	

5.2 Switch On/Off

Power on steps:

Step 1: Turn on the inverter❶;

Step 2: Turn on the battery breaker❷("OFF" to the "ON");

Step 3: Press the battery switch button❸.

If the batteries are connected in parallel, turning on any one of them will turn on all the others.

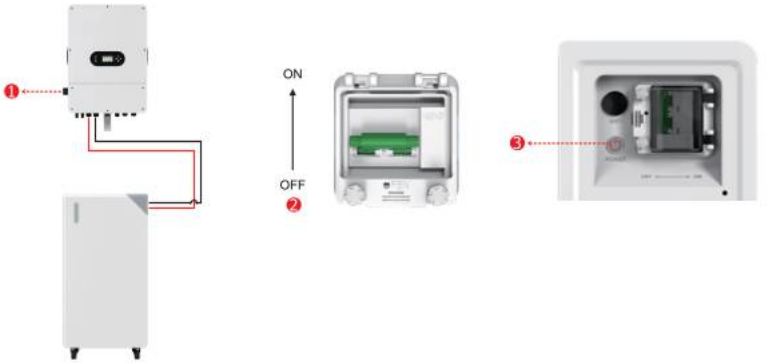

Power down steps:

Step 1: Turn off the inverter❶;

Step 2: Press and hold the battery switch button for 3 seconds❷;

Step 3: Disconnect the breaker of the battery❸("ON" to "OFF").

If the batteries are connected in parallel, turning off any one of them will turn off all the others.

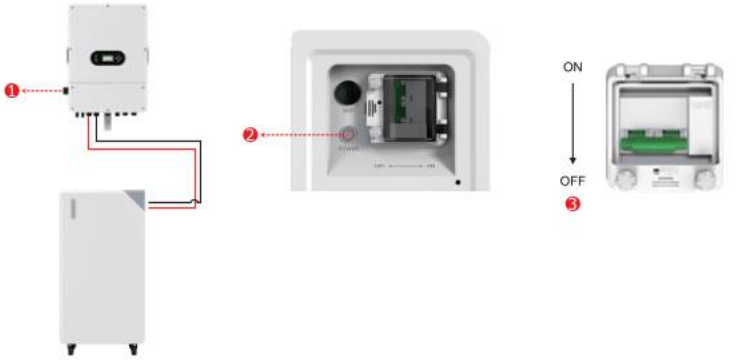

6. Manage Devices Via Network

***If the entire system uses Felicitysolar products, the battery information can be monitored through the inverter. If paired with inverters from other brands, please follow the steps below:**

6.1 Configure Network

6.1.1 Download APP

Scan the QR Code on the right side and download the APP.

Fsolar APP

6.1.2 Connect to Built-in WIFI wireless network

Configure the mobile phone WLAN to connect to the wireless network of the Built-in WIFI

1) Run the APP, enter the login page, click the [Setup network] button to enter the network configuration page.

2) On the network configuration page, click the [Switch] button to enter the mobile phone WLAN page.

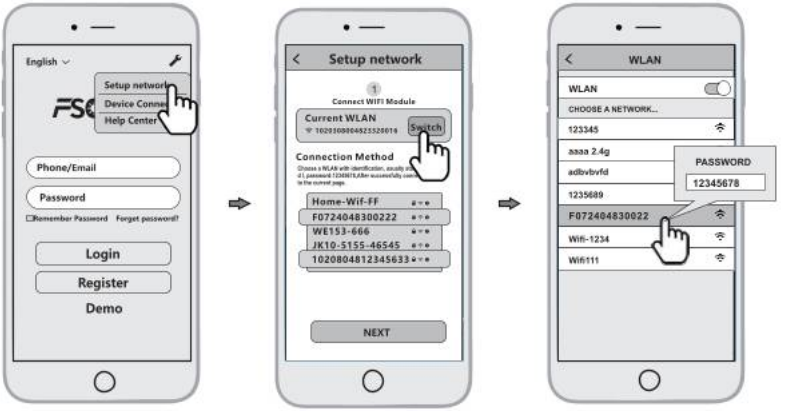

Configure the mobile phone WLAN to connect to the wireless network of the Built-in WIFI.

1) Run the APP, enter the login page, click the [Setup network] button to enter the network configuration page.

2) On the network configuration page, click the [Switch] button to enter the mobile phone WLAN page.

3) On the WLAN page of the mobile phone, find the corresponding wireless network name (SSID) of the Smart WiFi module, starting with F(e.g. Fxxxxxxxxxxxxxxxxx,the xxxxxxxx xxxxxxxxx is the same as the device serial number). enter the module wireless network password (default password: 12345678), and connect to the wireless network of the Built-in WIFI.

6.1.3 Configure the network

1)After the mobile WLAN is connected to the wireless network of the Built-in WIFI,return to the network configuration page ofthe APP and click the [NEXT] buttonto enter the WiFi network page.
2) On the WiFi network page, select the router wireless network to which the Built-in WIFI needs to connect, or directly enter the route name,enter the router wireless network password and click the [NEXT] button.
3)And then wait for the Built-in WIFI to connect to the router's wireless network, which will takesome time.
Then you can use the diagnostic function of the APP or according to the fault appendix to troubleshoot the problem.

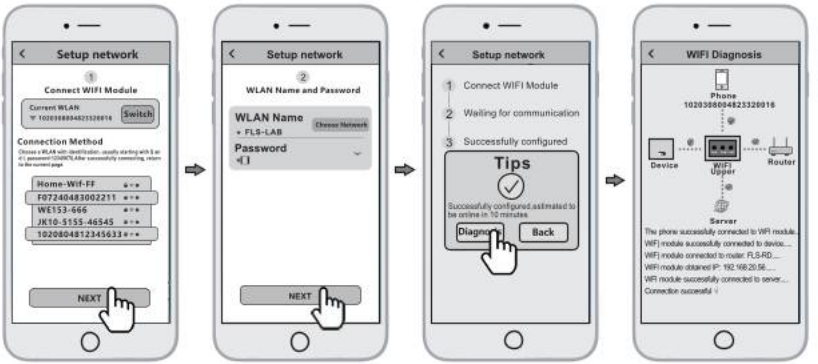

6.2 Create the Plant

After the Built-in WIFI is connected to the server, it will transmit the data of the device to the server. And after the plant is created, users can view and manage the device via the APP or web browser.

6.2.1 Manage devices via APP

1)Register an account

Run the app, enter the login page, click the [Register] button, select the role you want to register, enter and fill in the relevant information (optional email) to register.

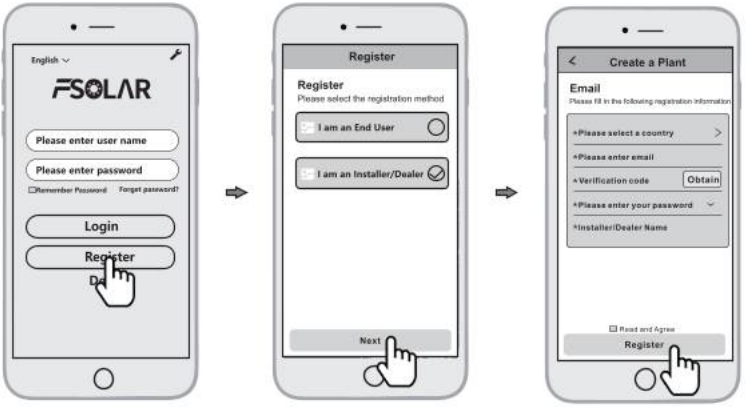

2)New plant construction

- Log in with the newly registered account, enter the homepage, and click on [Create A Plant]

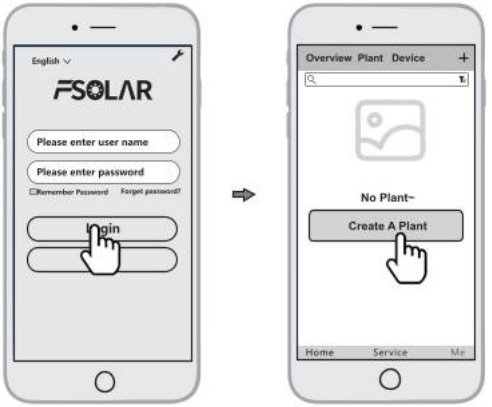

- Fill in the corresponding information and click [OK]
- Click [Add device], click the above icon [scan, align the bar code/two-dimensional code on the side of the inverter or battery pack to scan, or fill in the SN and activation code on the label.

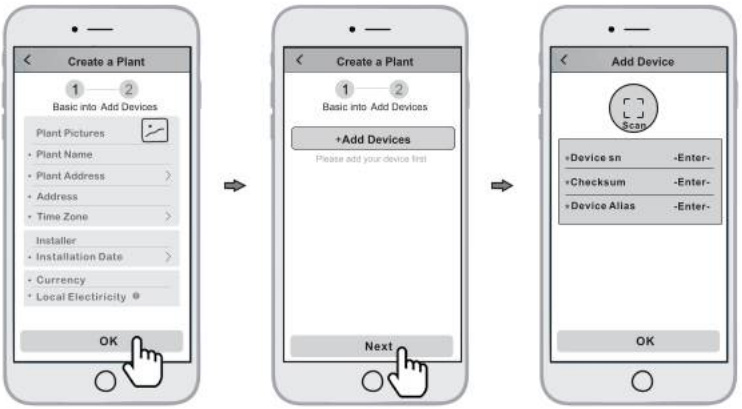

- Manage the device via a web browser, please refer to: https://shine.felicitysolar.com

7. Maintenance and Troubleshooting

7.1 Storage

- Do not expose battery to open flame.
- Do not place the product under direct sunlight.
- Do not place the product near flammable materials. It may lead to fire or explosion in case of accident.
- Store in a cool and dry place with ample ventilation.
- Store the product on a flat surface.
- Store the product out of reach of children and animals.
- Do not damage the unit by dropping, deforming, impacting, cutting or penetrating with a sharp object.
- It may cause leakage of electrolyte or fire.
- Do not touch any liquid spilled from the product. There is a risk of electric shock or damage to skin.
- Always handle the battery wearing the insulated gloves.
- Do not step on the product or place any foreign objects on it. This can result in damage
- Do not charge or discharge damaged battery.

7.2 Maintenance Troubleshooting

7.2.1 Analysis and Treatment of Common Faults

Item	Fault phenomenon	Reason analysis	Solution
1	Unable to communicate with the inverter	The wrong communication cable was used	Use the correct communication cable to connect the battery and the inverter.
2	Battery does not fully charge	The charging voltage set on the inverter is too low	Set the charging voltage on the inverter according to the recommended value in the battery manual
3	Inaccurate SOC display	The battery's SOC has not been calibrated	The SOC will automatically calibrate after one full charge cycle. First, discharge the battery to 0%, then charge it to 100%.
4	High current charging & discharging causes output cutoff	The charging & discharging current set on the inverter is too high	Set the charging & discharging current on the inverter according to the recommended values in the battery manual
5	Battery output is interrupted due to high current during charging and discharging	The charging and discharging current settings on the inverter are too high	Set the charging and discharging current on the inverter according to the recommendations in the battery manual
6	When multiple batteries are connected in parallel, battery data on the inverter is missing or incorrect.	The parallel connection of the batteries is not set up correctly	Check the communication cables between the batteries
7	The battery indicates it is charging, but the SOC does not change.	The ambient temperature is too low, preventing the battery from charging.	Charge the battery in an indoor environment that meets the operating temperature range specified in the manual

7.2.2 Fault Code

LED Definition	LED Status				Fault Info
	LED1	LED2	LED3	LED4	
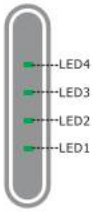	ON	OFF	OFF	OFF	Bbttery Voltage High
	OFF	ON	OFF	OFF	Battery Voltage Low
	ON	ON	OFF	OFF	Cell Voltage High
	OFF	OFF	ON	OFF	Cell Voltage Low
	ON	OFF	ON	OFF	Charging Current High
	OFF	ON	ON	OFF	Discharging Current High
	ON	ON	ON	OFF	BMS Temperture High
	OFF	OFF	OFF	ON	BMS Temperature Low
	ON	OFF	OFF	ON	Cell Temperture High
	OFF	ON	OFF	ON	Cell Temperature Low
	ON	ON	OFF	ON	Current Sensor Abnomal

8. Battery recovery

Aluminum, copper, lithium, iron, and other metal materials are extracted from discarded LiFePO4 batteries using an advanced hydrometallurgical process, achieving a comprehensive recovery efficiency of up to 80%. The detailed process steps are outlined as follows.

8.1 Recovery process and steps of cathode materials

The aluminum foil used as collector is an amphoteric metal. Initially, it is dissolved in a NaOH alkaline solution, allowing aluminum to enter the solution as $NaAlO_2$. After filtration, the filtrate is neutralized with a sulfuric acid solution, resulting in the precipitation of $Al(OH)_3$. When the pH exceeds 9.0, the majority of the aluminum precipitates, and the resulting $Al(OH)_3$ can achieve chemical-grade purity upon analysis.

The filter residue is treated with sulfuric acid and hydrogen peroxide, allowing lithium iron phosphate to dissolve into the solution as $Fe_2(SO_4)_3$ and Li_2SO_4, while separating it from carbon black and the carbon coating on lithium iron phosphate. After filtration, the pH of the filtrate is adjusted using NaOH and ammonia solution. Iron is first precipitated as $Fe(OH)_3$, followed by the precipitation of the remaining solution using a saturated Na_2CO_3 solution at 90°C.

8.2 Recovery of anode materials

The recovery process for anode materials is relatively straightforward. After separating the anode plates, the copper purity exceeds 99%, making it suitable for further refining into electrolytic copper.

8.3 Recovery of diaphragm

Automatic dismantling machine, pulverizes, wet gold pool, etc.

8.4 List of recycling equipment

The diaphragm material is primarily non-hazardous and holds no recycling value.

Appendix I

Model	FLB48314TG1-H
Battery Type	LiFePO4
Nominal Energy	16kWh
Nominal Capacity	314Ah
Nominal Voltage	51.2V
Operating Voltage	44.8~57.6V
Max.continuous charge/Discharge current[1]	160A
Peak Charge/Discharge Current(15s)	300A
Scalability	Up to 32 units in parallel(512kWh)
Depth of Discharge(DOD)	≥ 95%
Display type	LED
Protection Level	IP65
Working Temperature Range	Charge: -20°C~+55°C
	Discharge:-20°C~+55 °C
Storge Temperature Range	0°C~+35°C
Humidity	5%~95%
Altitude	≤ 2000m
Communication	RS485 / CAN
Cycle Life	≥ 8000 Cycles(25°C ±2°C,0.5C/0.5C,90%DOD,70%EOL)
Installation	Floor-Mounted
Protection	Built-in smart BMS, Breaker, Fuse
Warranty Period[2]	10 Years
Product Weight Approximate	121kg
Package Weight Approximate	143kg
Product Dimension	450x895x235mm
Package Dimension	958x548x440mm
[1] Max.continuous charge/Discharge current is affected by temperature and SOC.	
[2] Conditions apply, refer to Felicitysolar Warranty policy.	

*In the absence of communication, please follow the recommended settings in the table below.

Setting	FLB48314TG1-H
Max. Charging Voltage	57.6V
Floating Charging Voltage	57.6V
Max. Charging Current	160A*N
Cut-off Voltage	44.8V

Notes:

1. "N" means the number of battery packs connected in parallel.
2. Charging method: Charge at constant current 80A until the voltage reaches 57.6V, then charge at 57.6V til charge current is 5A.