felicitysolar®

Make life full of hope

USER MANUAL

Off-Grid Solar Inverter

IVAM6048P1G1



Contents

1. Safety Introductions.....1

2.Product Introductions.....2

2.1 Product Overview.....3

2.2 Product Dimensions.....4

2.3 Product Features.....5

2.4 Basic System Architecture.....5

3. Installation.....6

3.1 Parts List.....6

3.2 Product handling requirements.....7

3.3 Mounting instructions.....7

3.4 Battery connection.....11

3.4.1 Function port definition.....12

3.4.2 Temperature sensor connection for lead-acid battery.....13

3.5 Grid connection and backup load connection.....14

3.6 PV Connection.....16

3.6.1 PV Module Selection:.....17

3.6.2 PV Module Wire Connection:.....17

3.7 Earth Connection(mandatory).....19

3.8 WIFI Connection.....19

3.9 Wiring System for Inverter.....20

3.10 Typical application diagram of diesel generator.....21

3.11 Single phase parallel connection diagram.....22

3.12 Three phase Parallel Inverter.....23

4.Operation.....24

4.1 Power ON/OFF.....24

4.2 Operation and Display Panel.....24

5.LCD Display Icons.....25

5.1 Boot Screen.....25

5.2 Main Screen.....25

5.2.1 Power-on Instructions.....27

5.2.2 LCD operation flow chart.....28

5.2.3 Setup Wizard Steps.....29

5.3 Solar Power Curve..... 30
5.4 Setting Menu..... 32
5.4.1 Application Mode..... 32
5.4.2 General setup..... 34
5.4.3 Setup Wizard..... 45
6. Mode..... 49
7.Fault Information and Processing..... 50
7.1 Preparations for Installation..... 50
7.2 Warning Code..... 51
7.3 Fault Code..... 52
8.Limitation of Liability..... 56
9.Datasheet..... 57
10.Appendix I..... 59
11.The Wi-Fi operation Guide in APP..... 60
11.1 Introduction..... 60
11.2 Download and install APP..... 60

Revision History

Revision NO.	Revision Date	Revision Reason
1.0	2025.8	First Published

About This Manual

This manual mainly describes product information, installation, operation, and maintenance guidelines. It does not cover all aspects of the photovoltaic (PV) system.

How to Use This Manual

Read this manual and all related documents carefully before operating the inverter. Keep all documents properly stored and readily available for reference.

Contents may be periodically updated or revised due to product development. The information in this manual is subject to change without notice. The latest manual can be acquired via https://www.felicitysolar.com/

1. Safety Introductions

Symbols	Name	Instruction
	Danger	Serious injury or death may occur if the relevant safety requirements are not followed.
	Warning	Physical injury or equipment damage may occur if the relevant requirements are not followed.
	Electrostatic sensitive	Damage may occur if the relevant anti-static requirements are not followed.
	Hot surface	Sides of the device may become hot. Do not touch.
	Earth terminal	The inverter must be reliably grounded.
	Caution	Ensure that both DC and AC circuit breakers are disconnected, and wait at least 5 minutes before wiring or inspection.
NOTE	Note	The procedures taken for ensuring proper operation.
CE	CE mark	The inverter complies with the CE directive.
	EU WEEE mark	Product should not be disposed as household waste.

- This chapter provides important safety and operating instructions. Read and retain this manual for future reference.
- Before using the inverter, please read the battery instructions, warning signs, and related sections of this manual.
- Do not disassemble the inverter. For maintenance or repair, contact a qualified service center.
- Improper reassembly may cause electric shock or fire.
- To reduce the risk of electric shock, disconnect all wires before performing any maintenance or cleaning. Turning off the unit alone will not eliminate this risk.
- Caution: Only qualified personnel should install this device with a battery.
- Never charge a frozen battery.
- For optimal operation, follow the required specifications to select the correct cable size. Proper installation is essential for reliable performance.
- Be cautious when working with metal tools around batteries. Dropping a tool may cause sparks, short circuits, or even explosions.
- Please strictly follow installation procedure when you want to disconnect AC or DC terminals.
- Please refer to "Installation" section of this manual for the details.
- Grounding instructions – this inverter must be connected to a permanently grounded wiring system. Ensure compliance with local requirements and regulations during installation.
- Never short-circuit the AC output or DC input. Do not connect the inverter to the mains if the DC input is short-circuited.

2. Product Introductions

This multi-functional inverter integrates an inverter, solar charger, and battery charger, providing uninterruptible power supply in a compact design. The LCD display allows users to configure and operate key functions easily, including battery charging, AC/solar charging, and input voltage settings for various applications.

2.1 Product Overview

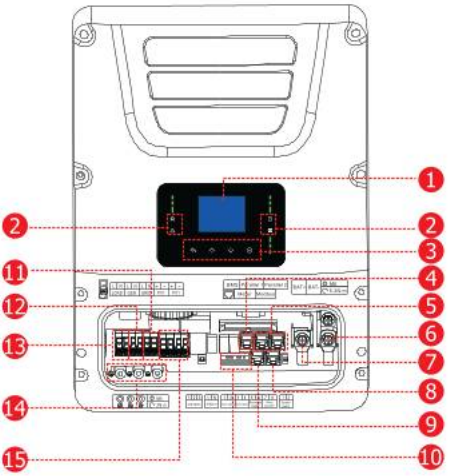

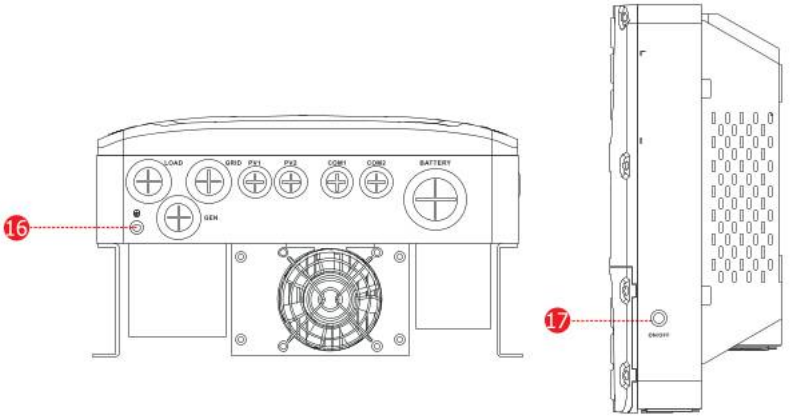

1.LCD Display
2.Inverter indicators
3.Function buttons
4.BMS port
5.Parallel port
6.BAT-
7.BAT+
8.Modbus port
9.Meter port
10.Function port
11.Grid port
12.Gen port
13.Load port
14.Ground of LOAD, GRID and GEN
15. PV input connection port
16.PE
17.Power ON/OFF button

2.2 Product Dimensions

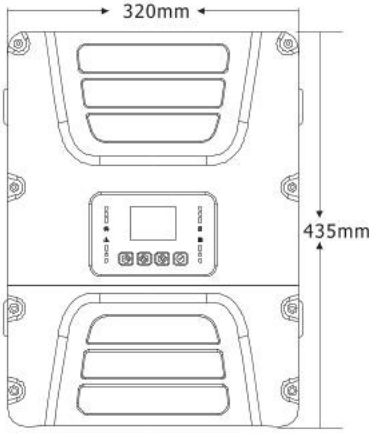

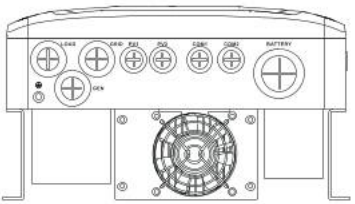

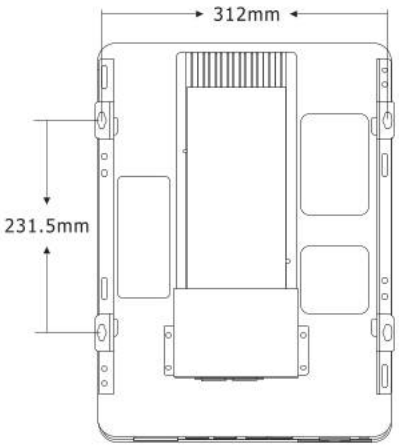

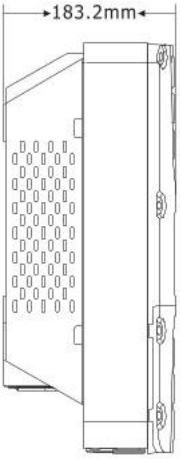

2.3 Product Features

- Supports self-consumption operation.
- Auto restart while AC is recovering.
- Programmable multiple operation modes: on-grid, off-grid, and UPS.
- Configurable battery charging current via LCD settings based on application needs.
- Compatible with grid or generator power sources.
- Overload, over-temperature, and short-circuit protection.
- Built-in limit function to prevent excess power from feeding back to the grid.
- Supports remote monitoring and built-in dual MPPT trackers.

2.4 Basic System Architecture

- The following illustration shows the basic application of this inverter.
- It also includes the following devices for a complete operating system.
- Generator or Utility
- PV modules
- Consult your system integrator for alternative system configurations based on specific requirements.
- This inverter can supply power to various home or office appliances, including motor-type devices such as refrigerators and air conditioners.

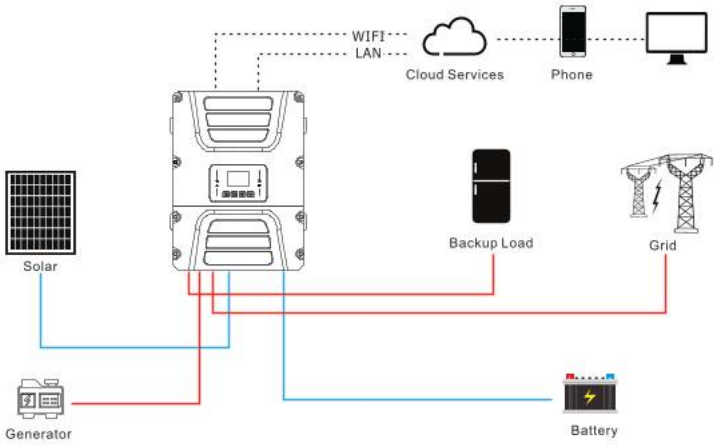

Note: When the GEN port is used as a "generator input" port, the relays on the GRID and GEN ports will not close simultaneously. The GEN relay closes only when the inverter operates in off-grid mode.

3. Installation

3.1 Parts List

Check all equipment before installation to ensure there is no damage during transportation.
The following items should be included in the package:

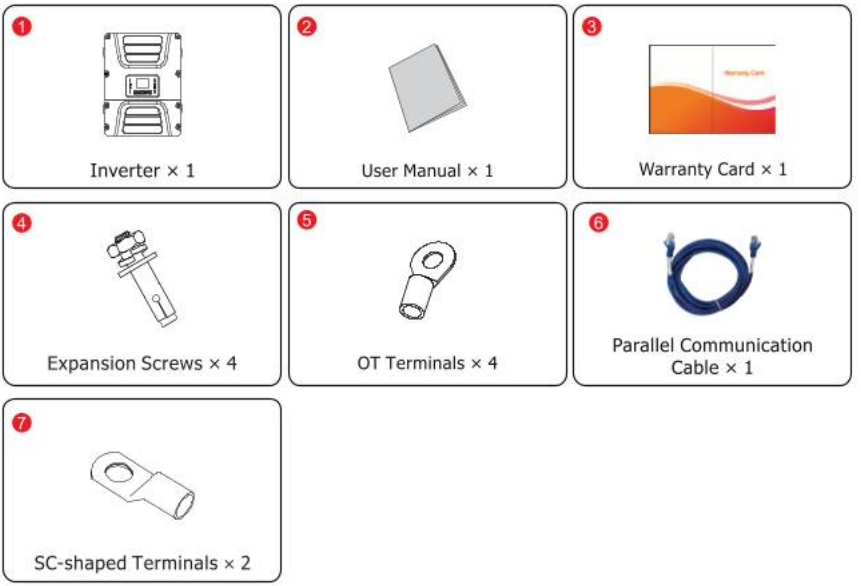

No.	Name	Description	Quantity
1	Inverter	Inverter	1
2	User Manual	User manual	1
3	Warranty Card	Warranty card	1
4	Expansion Screws	Used to secure the product's wall mount	4
5	OT terminals	Used for external grounding connection.	4
6	Parallel Communication Cable	Used for communication between multiple parallel inverters.	1
7	SC-shaped Terminals	Used for battery connection.	2

3.2 Product handling requirements

Lift the inverter out of the packing box and transport it to the designated installation location.

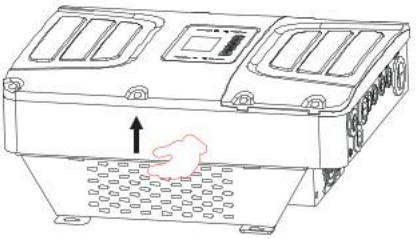

CAUTION:

- Improper handling may cause personal injury!
- Arrange an appropriate number of personnel to carry the inverter according to its weight. Installation personnel should wear protective equipment such as safety gloves and protective boots.
- Placing the inverter directly on a hard surface may damage its metal enclosure. Protective materials such as sponge pads or foam cushions should be placed underneath.
- Move the inverter by one or two persons, or use an appropriate transport tool.
- Lift the inverter using the provided handles.
- Keep the battery away from water and fire.

3.3 Mounting instructions

Installation Precaution

This inverter is designed for outdoor use (IP65). Please ensure the installation site meets the following conditions:

- Avoid direct sunlight.
- Avoid areas where highly flammable materials are stored.
- Avoid potentially explosive areas.
- Avoid direct exposure to cold air.
- Do not install near television antennas or antenna cables.
- Do not install at altitudes exceeding approximately 3000 meters above sea level.
- Avoid environments with precipitation or humidity levels above 95%.

Avoid direct sunlight, rain exposure, or snow accumulation during installation and operation. Before connecting the wires, remove the wiring cover by unscrewing the screws as shown below. After wiring, reattach the small cover and tighten the screws to a torque of 1.2 N·m.

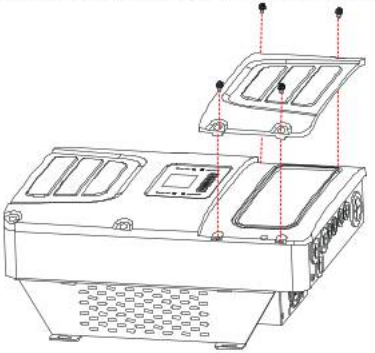

Installation Tools

Refer to the following recommended installation tools. Other auxiliary tools may also be used as needed.

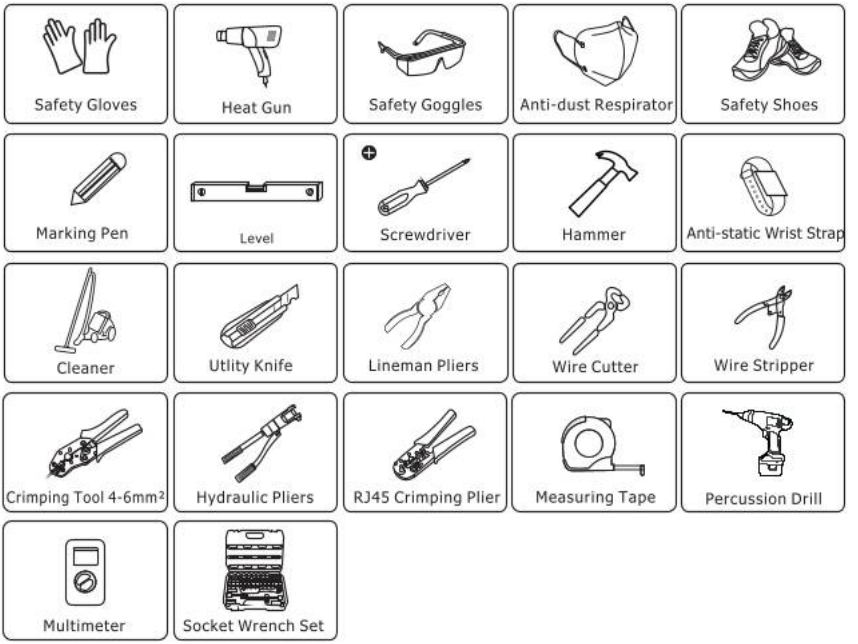

Considering the following points before selecting where to install:

- Select a vertical wall with sufficient load-bearing capacity, preferably made of concrete or other non-flammable material. The installation example is shown below.
- Install this inverter at eye level in order to allow the LCD display to be read at all times.
- The ambient temperature is recommeded to be between -40~60℃ to ensure optimal operation.
- Be sure to keep other objects and surfaces as shown in the diagram to guarantee sufficient heat dissipation and have enough space for removing wires on site.

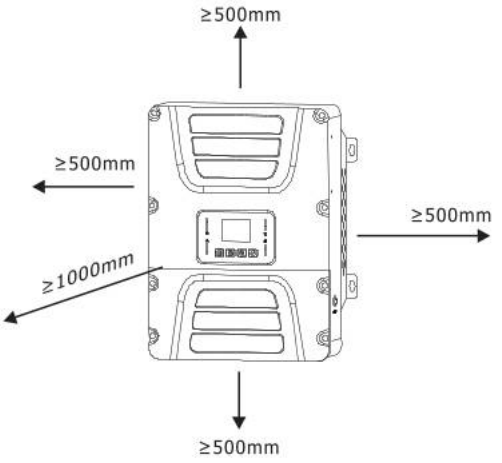

For proper air circulation to dissipate heat, allow a clearance of approx. 50cm to the side and approx. 50cm above and below the unit. And 100cm to the front.

Mounting the inverter

This inverter is heavy. Use caution when unpacking or moving it.

1.Use a marker to mark the required drilling positions through the hinge openings.

2.Using an 8mm drill bit, drill 4 holes at the marked positions, each to a depth of 40mm.

3.Use an appropriate hammer to drive the expansion bolts into the holes, then unscrew the nuts from the bolts.

4.Lift and maneuver the inverter to align its hinge holes with the expansion bolts. Tighten the nuts securely to complete the installation.

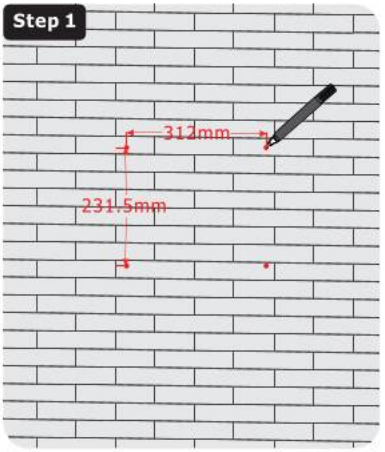

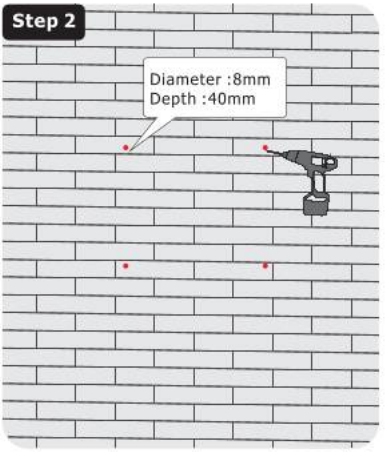

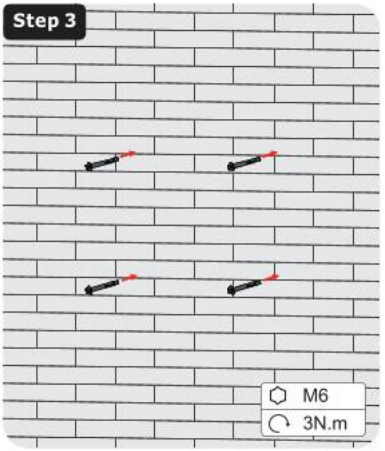

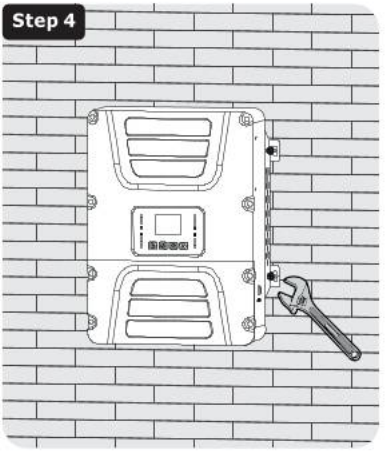

3.4 Battery connection

For safe operation and compliance, a separate DC over-current protector or disconnect device is required between the battery and the inverter. In some applications, switching devices may not be required but over-current protectors are still required. Refer to the typical amperage in the table below for the required fuse or circuit breaker size.

Model	Wire Size	Cable(mm²)
6kw	2~0AWG	35~50

All wiring must be performed by a professional person.
Connecting the battery with a suitable cable is important for safe and efficient operation of the system.

Please follow below steps to implement battery connection:

1. Please choose a suitable battery cable with correct connector which can well fit into the battery terminals.
2. Use a suitable screwdriver to unscrew the bolts and fit the battery connectors in, then fasten the bolt by the screwdriver, make sure the bolts are tightened with torque of 5.2 N.m in clockwise direction.
3. Make sure polarity at both the battery and inverter is correctly connected.
4. To prevent access by children or entry of insects, fasten the inverter's connector to the waterproof position by twisting it clockwise.

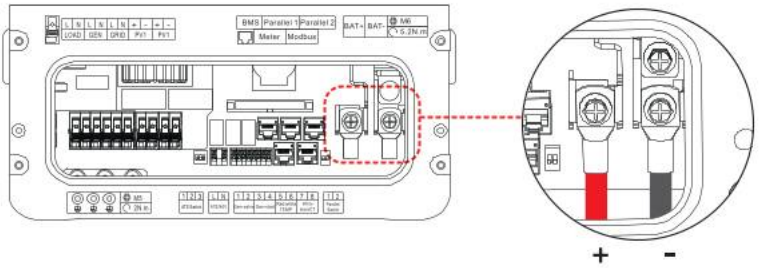

- Installation must be performed with care.
- Before making the final DC connection or closing the DC breaker/disconnector, ensure the positive (+) terminal is connected to positive (+) and the negative (-) terminal is connected to negative (-). Reversed battery polarity will damage the inverter.

3.4.1 Function port definition

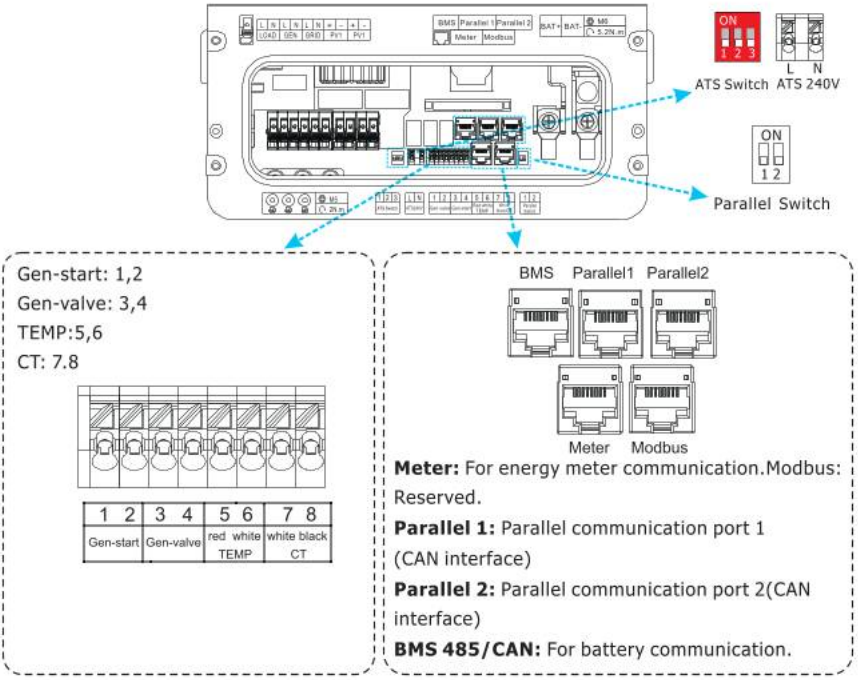

Gen-start/ Gen-valve(1,2/3,4): dry contact signal for startup the diesel generator.
When the diesel generator is connected to the GEN port and "GEN Signal" is enabled, the open contact "Gen-start" closes (no voltage output) and acts as a dry contact signal for starting the generator.

When the diesel generator is connected to the GRID port and "Grid Signal" is ticked, the open contact Gen-valve will close (no voltage output) and serve as the dry contact signal for starting the diesel generator.

TEMP(5,6): battery temperature sensor for lead acid battery.

CT(7,8): current transformer for "zero export to CT" mode.

ATS Switch : When all the dials of the dip-switch are in "ON" position, the ATS port will able to output AC voltage. Otherwise, if all the dials of the dip-switch are in opposite position of "ON", the ATS port will not output AC voltage.

NOTE: The "ATS Enable" (in Advanced Function) must be enabled for the dip-switch to take effect.

Parallel Switch: Parallel communication resistor. If the number of inverters in the parallel system is less than or equal to 6, all inverter's DIP switch (1&2) need be ON position. If the number of inverters in parallel system exceeds 6, the main 6pcs inverter's DIP switch needs to be ON position. And the other inverter DIP switch (1&2) needs to be OFF position.

3.4.2 Temperature sensor connection for lead-acid batteries

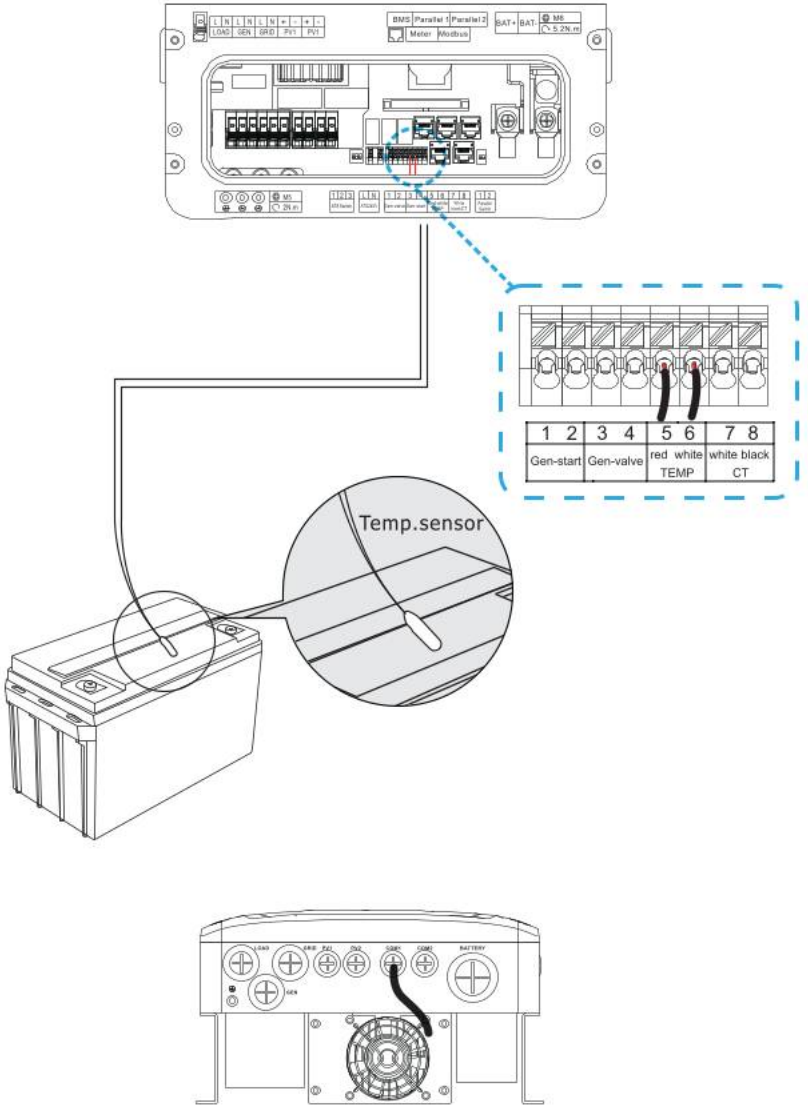

3.5 Grid connection and backup load connection

- Before connecting to the grid, a separate AC breaker must be installed between the inverter and the grid, and also intall a breaker between the backup load and the inverter. This will ensure the inverter can be securely disconnected during maintenance and fully protected from over current. For the 6kW model, the recommended AC breaker for backup load is 40A. For the 6 kW model, the recommended AC breaker for grid is 40A.
- There are three terminal blocks labeled "GRID," "LOAD," and "GEN." Do not connect input and output terminals incorrectly.



Note:

- In final installation,breaker certified according to IEC 60947-1 and IEC 60947-2 shall be installed with the equipment.
- All wiring must be performed by a qualified personnel.It is very important for system safety and efficient operation to use appropriate cable for AC input connection. To reduce risk of injury, please use the proper recommended cable

Grid connection and backup load connection (Copper wires)

Model	Wire Size	Cable(mm^2)
6kw	8AWG	6.0

Grid connection and backup load connection (Copper wires) (Bypass)

Model	Wire Size	Cable(mm^2)
6kw	8AWG	6.0

Please follow below steps to implement AC input/output connection:

1. Before making Grid, load and Gen port connection, be sure to turn off AC breaker or disconnector first.
2. Connect the ground wire of Grid, load and Gen first, followed by the neutral wire and the live wire.
3. Use wire cutters to cut open the wire sheath by about 10mm, use a tool to cut through the cut wire along this cross-shaped groove, lift the terminal clip, insert the wire and press the clip to fix it.

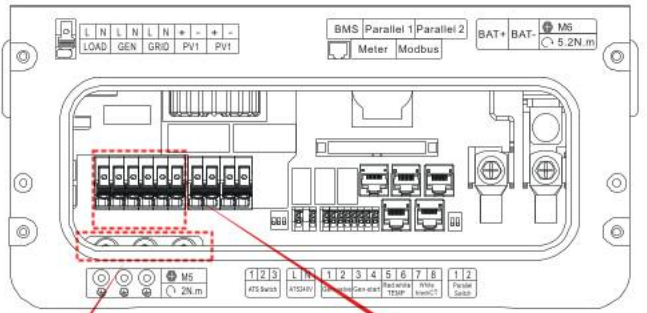

Ground of LOAD, GRID and GEN

LOAD GEN GRID

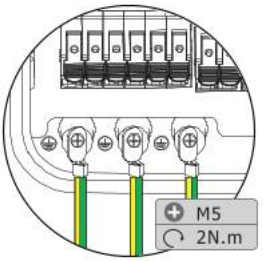

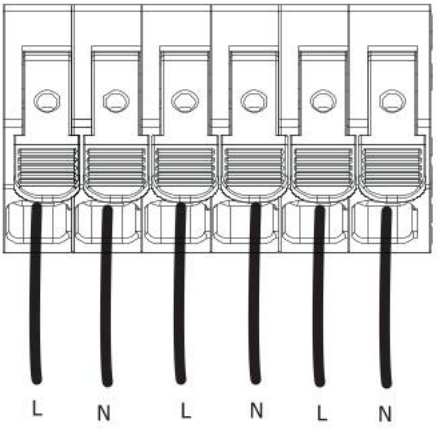



Ensure the AC power source is powered off before wiring the unit.

3. Then, insert AC output wires according to polarities indicated on the terminal block and tighten terminal. Be sure to connect corresponding N wires and PE wires to related terminals as well.
4. Make sure the wires are securely connected.
5. Appliances such as air conditioner are required at least 2-3 minutes to restart because it is required to have enough time to balance refrigerant gas inside of circuit. If a power shortage occurs and recovers in short time, it will cause damage to your connected appliances. To prevent this kind of damage, please check manufacturer of air conditioner if it is equipped with time-delay function before installation. Otherwise, this inverter will trigger overload fault and cut off output to protect your appliance but sometimes it still causes internal damage to the air conditioner

3.6 PV Connection

Before connecting PV modules, install a separate DC circuit breaker between the inverter and the PV modules. It is very important for system safety and efficient operation to use appropriate cable for PV module connection. To reduce the risk of injury, use the recommended cable size shown below.

Model	Wire Size	Cable(mm²)
6kw	12AWG	2.5



To prevent malfunction, do not connect PV modules with potential current leakage to the inverter. For example, grounded PV modules will cause current leakage to the inverter. When using PV modules, please ensure the PV+ & PV of solar panel is not connected to the system ground bar.



A PV junction box with surge protection must be used; otherwise, lightning strikes on PV modules may damage the inverter.

3.6.1 PV Module Selection:

When selecting proper PV modules, please be sure to consider below parameters:

1) Open circuit Voltage (Voc) of PV modules not exceeds the Max. PV input voltage of the lable. of inverter.

2) Open circuit Voltage (Voc) of PV modules should be higher thanStart-up Voltage of the lable.

3) The PV modules used to connected to this inverter shall be Class A rating certified according to IEC 61730.

Inverter Model	6kw
PV Input Voltage	370V(90V~500V)
MPPT Voltage Range	90V~425V
No. of MPP Trackers	2
No. of Strings MPP Tracker	1+1

3.6.2 PV Module Wire Connection:

1. Switch the Grid Supply Main Switch(AC)OFF.
2. Switch the DC Isolator OFF.
3. Assemble PV input connector to the inverter.



Safety Hint:

- Before connection, please make sure the polarity of the output voltage of PV array matches the "DC+" and "DC-" symbols.
- Before connecting inverter, please make sure the PV array's open circuit voltage less than 500V.

Safety Hint:

- Please use approved DC cable for PV system.voltage is within the 500V of the inverter.

The steps to assemble the DC connectors are listed as follows:
Step 1: Use wire cutters to cut open the wire sheath by about 10mm



Step 2: Use a tool to cut through the cut wire along this cross-shaped groove, lift the terminal clip, insert the wire and press the clip to fix it.

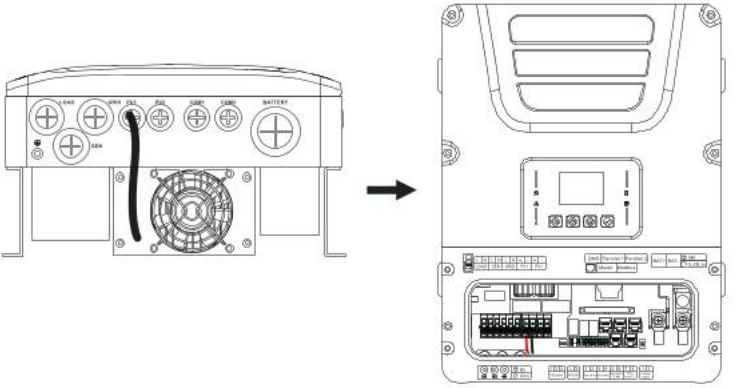

Warning:

Sunlight shines on the panel will generate voltage, high voltage in series may cause danger to life. Therefore, before connecting the DC input line, the solar panel needs to be blocked by the opaque material and the DC switch should be 'OFF', otherwise, the high voltage of the inverter may lead to life threatening conditions.

3.7 Earth Connection(mandatory)

Ground cable shall be connected to ground plate on grid side, this prevents electric shock if the original protective conductor fails.

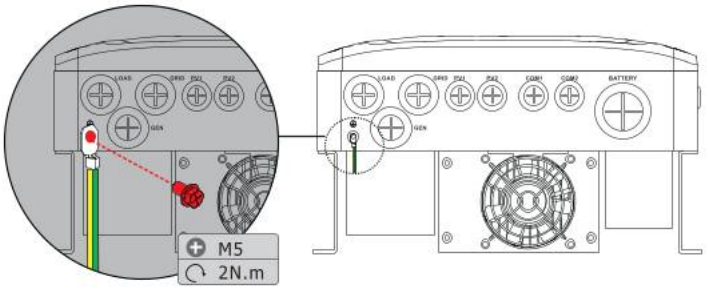

Earth connection (Copper wires)

Model	Wire Size	Cable(mm²)	Torque value(max)
6kW	8AWG	6.0	2.0Nm

Earth connection (Copper wires) (Bypass)

Model	Wire Size	Cable(mm²)	Torque value(max)
6kW	8AWG	6.0	2.0Nm

Warning:

Inverter has built-in leakage current detection circuit, The type A RCD can be connected to the inverter for protection according to the local laws and regulations.

If an external leakage current protection device is connected, its operating current must be equal to 300 mA or higher, otherwise inverter may not work properly.

3.8 WIFI Connection

The inverter integrated internal Wi-Fi module. Please refer to the APP manual for detail configurations.

3.9 Wiring System for Inverter

This diagram is an example for grid systems without special requirements on electrical wiring connection.

Note: The load PE line and earthing bar must be grounded properly and effectively. Otherwise the back-up function may be abnormal when the grid fails.

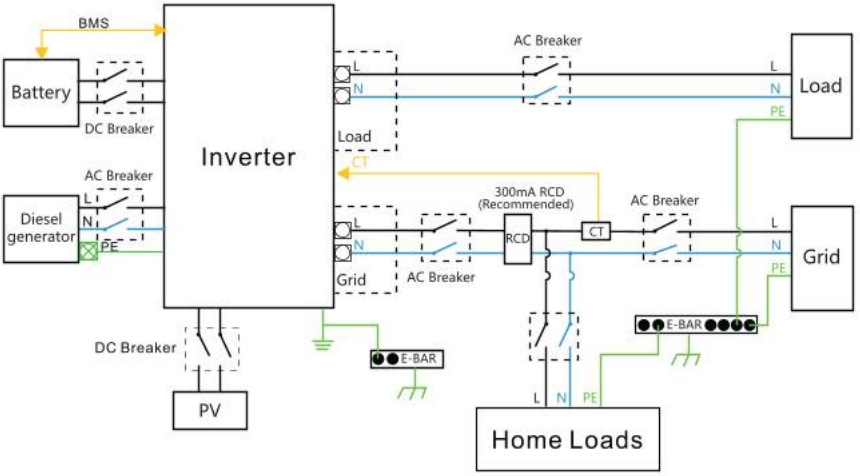

This diagram is an example for application that Neutral connects together with PE in distribution box.

Such as: Australia, New Zealand,etc. (Please follow local wiring regulations!)

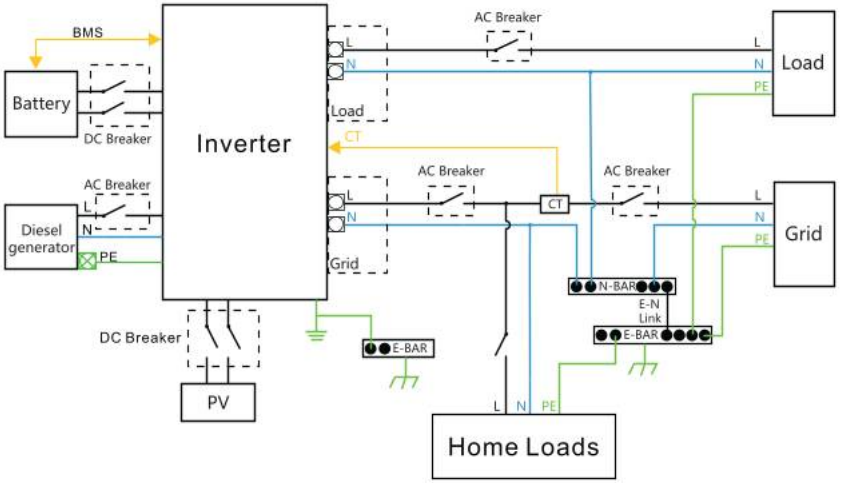

3.10 Typical application diagram of diesel generator

CAN L wire N wire PE wire

G-start/ G-valve(1,2,3,4): dry contact signal for startup the diesel generator.
When the diesel generator is connected to the GEN port and "GEN Signal" is ticked, the open contact G-start will close (no voltage output) and serve as the dry contact signal for starting the diesel generator.
When the diesel generator is connected to the GRID port and "Grid Signal" is ticked, the open contact G-valve will close (no voltage output) and serve as the dry contact signal for starting the diesel generator.

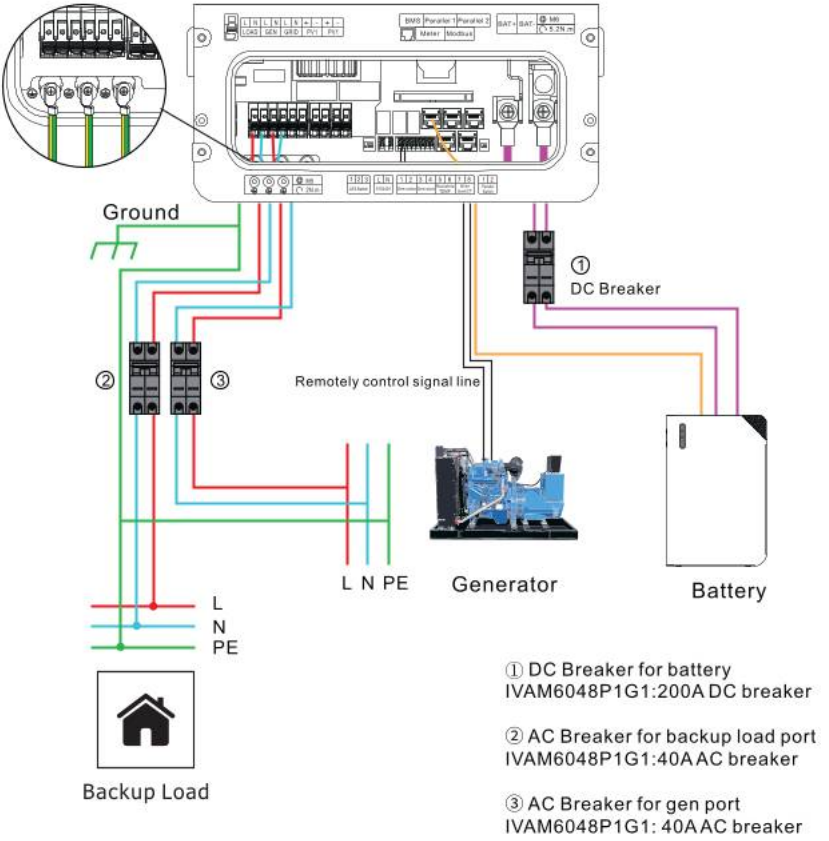

3.11 Single phase parallel connection diagram

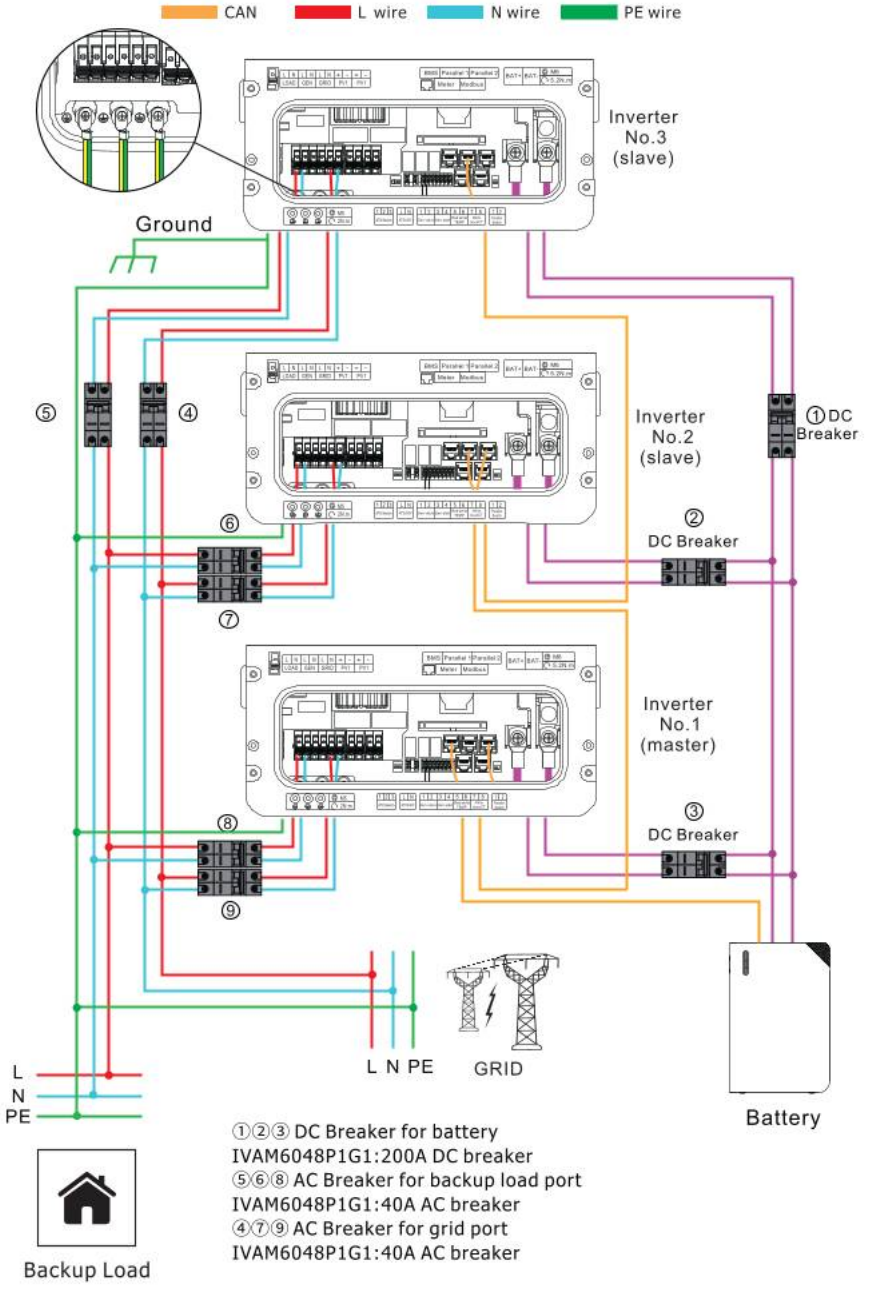

3.12 Three phase Parallel Inverter

①②③ DC Breaker for battery
IVAM6048P1G1: 200A DC breaker
⑤ AC Breaker for grid port
IVAM6048P1G1: 40A AC breaker
④ AC Breaker for backup load port
IVAM6048P1G1: 40A AC breaker

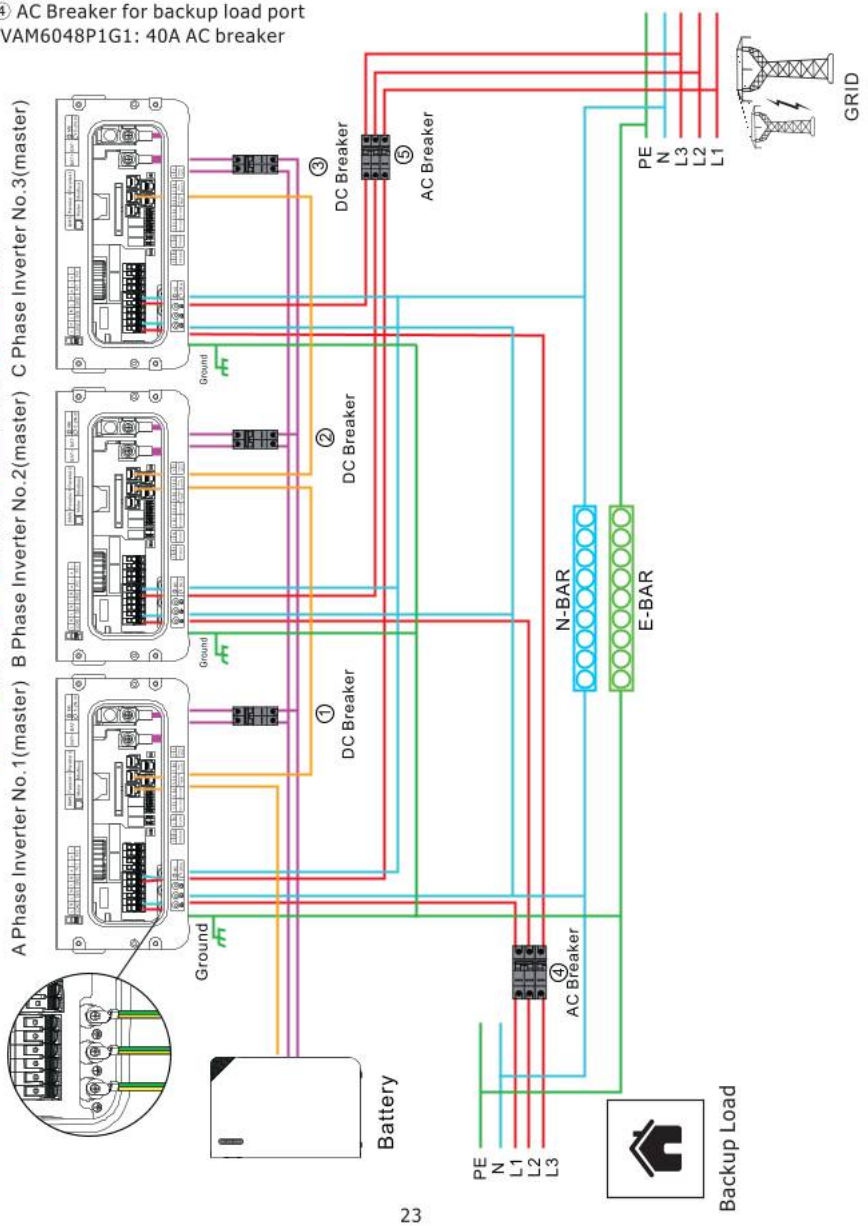

4. OPERATION

4.1 Power ON/OFF

After the unit has been properly installed and the batteries are securely connected, press the ON/OFF button(located on the right side of the case) to turn on the unit. When system without battery connected, but connect with either PV or grid, and ON/OFF button is switched off, LCD will still light up, In this condition, when switch on ON/OFF button and select NO battery, system can still work.

4.2 Operation and Display Panel

The operation and display panel, shown in below chart, is on the front panel of the inverter. It includes four function keys, four LED indicators, and a LCD display, indicating the operating status and input/output power information.



Function Key	Icon	Description
ESC		To exit setting mode
Up		To go to previous selection
Down		To go to next selection
Enter		To confirm the selection

LED Indicator	Icon	Color	State	Description
Battery		Green	solid	The battery is full.
			flashing	The battery is charging.
			dim	The battery is not charged.
Utillity		Green	solid	Inverter is running in utility mode.
			dim	Inverter is not running in utility mode.
Inverter		Green	solid	Inverter is running in off-grid mode.
			dim	Inverter is not running in off-grid mode.
Fault		Red	solid	Inverter works in fault event.
			dim	Inverter works normally.
Buzzer Information				
Buzzer beep	When the buzzer is enabled, it will keep beeping if the inverter experiences a fault.			

5. LCD Display Icons

5.1 Boot Screen

After power-on, the system enters the boot screen and remains there for about 20 seconds while it completes the system initialization.



5.2 Main Screen

1. The LCD is a touch screen, below screen shows the overall information of the inverter.



Operating status	Icon	Color	Description
Normal operation		Green	The icon in the center of the home screen indicates that the system is in normal operation.
Standby		White	The icon in the center of the home screen ndicates that the system is standby.
Fault		Red	If it turns into red and shows "! ", it means the inverter has fault,
Warning		Yellow	If it turns into yellow, it means the inverter has warning

2. At the top of the screen is the time (year-month-day,time), and communication connection status.

Ⓜ: Parallel system master or slave flag.

: WIFI communication success.

3. System setup icon, press this set button, you can enter into the system setup screen which including Basic Setup, Battery Setup, Grid Setup, Gen PORT Setup, Work Mode, Advanced Function, Parallel Setup, and History Fault.
The main screen includes the icons for PV (left up), grid (right up), battery (left bottom), load (right bottom) ,Smart Load (up), and GEN (bottom). It also displays the energy flow direction using arrows.

Some clarifications about the system status are as follows:

- PV power will always be positive.
- Grid power negative means sell to grid, positive means get from grid.
- Usually the load power is positive, but in some specifical scenerios, such as several inverters connnected in parallel, the load power may be negative.
- GEN power will always be positive.

5.2.1 Power-on Instructions

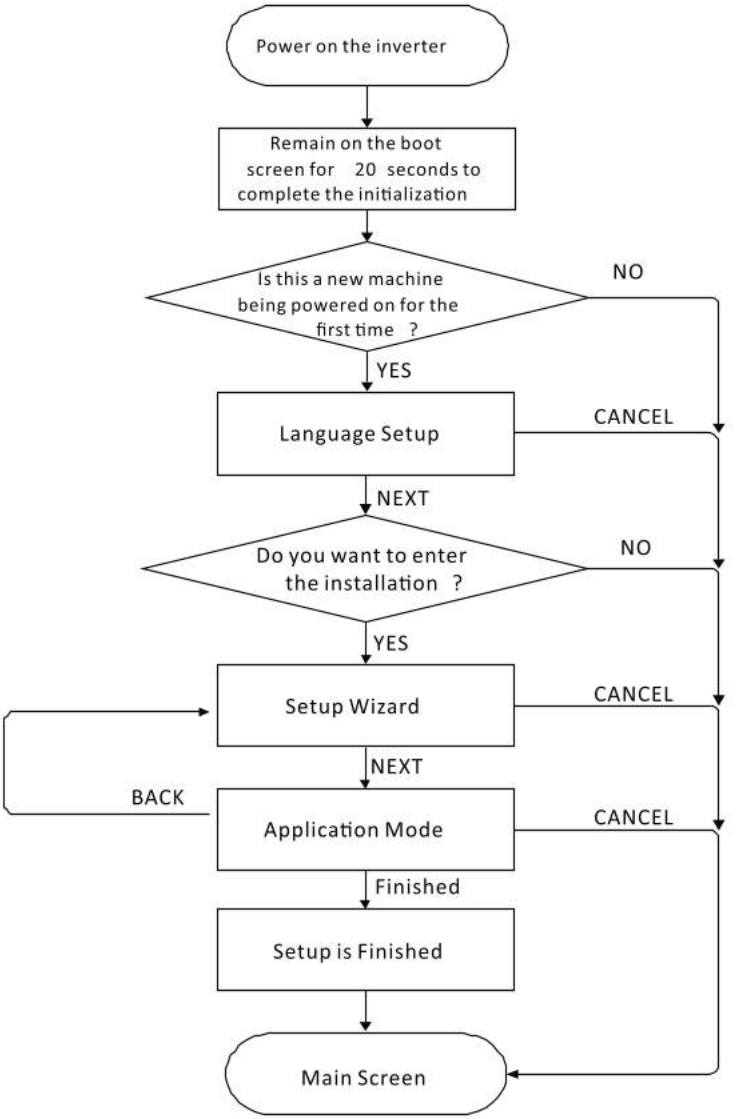

5.2.2 LCD operation flow chart

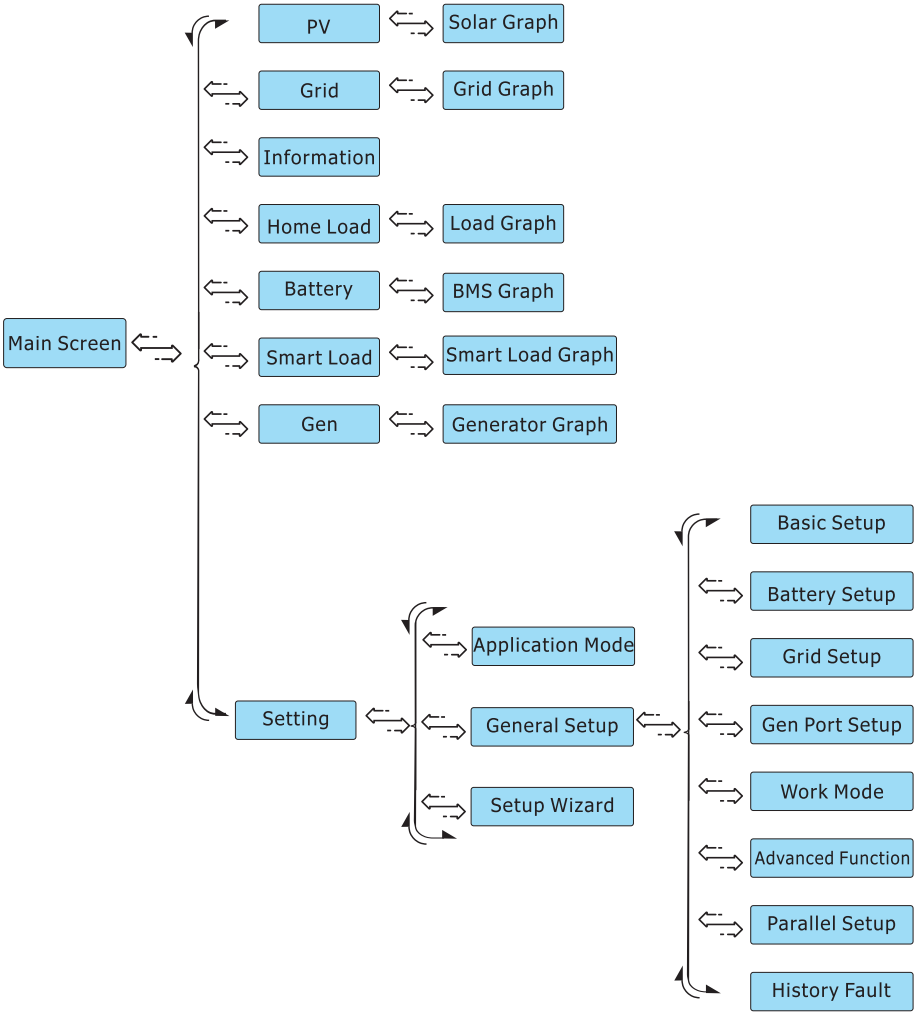

5.2.3 Setup Wizard Steps

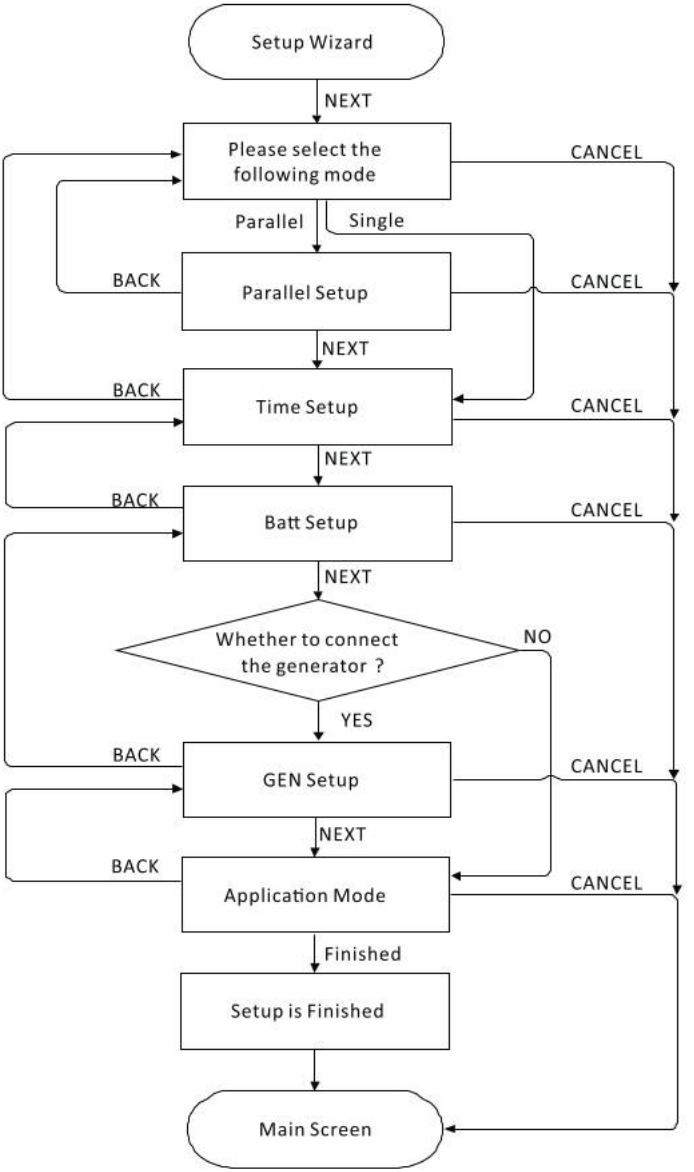

5.3 Solar Power Curve

	**This is Solar Panel detail page.** **Power:** Current solar panel generation power. **Today/Total:** Today's and total generation energy. Voltage, Current, and Power of each MPPT at the current time.
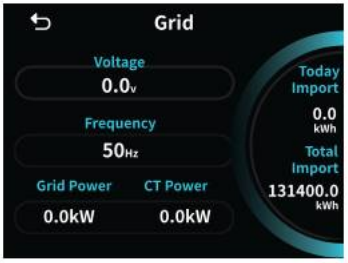	**This is Grid detail page.** **Grid Power:** Power detected by internal sensors on AC grid input port. **CT Power:** Power detected by external current transformer or meter. **Voltage:** The AC voltage of phase to line on the grid port at current time. **Frequency:** The AC frequency on the grid port at current time. **Import:** Today's and total import energy from grid to the inverter.
	**This is Inverter information page** The version information of firmware and the series number of inverter.
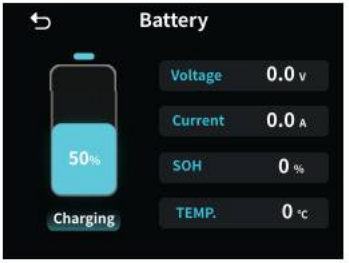	**This is Battery detail page** **Voltage:** The voltage of battery. **Current:** The current of battery. Positive values indicate charge current, and negative values indicate discharge current. **SOC:** The SOC of battery uploaded by BMS. **SOH:** The SOH of battery uploaded by BMS. **TEMP.:** The temperature of battery. **Charging:** The operating status of battery.

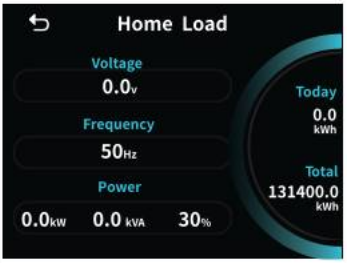	**This is Load detail page.** **Power:** The power consumption of the smart load at the current time. **Voltage:** The AC voltage on the load port of the inverter. **Frequency:** The AC frequency on the load port of the inverter. **Today / Total:** Today's and total load consumption energy.
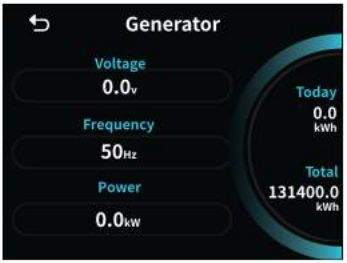	**This is Generator detail page.** **Power:** The power consumption of the generator port. **Voltage:** The AC voltage of the generator port. **Frequency:** The AC frequency of the generator port. **Today / Total:** Today's and total load consumption energy.
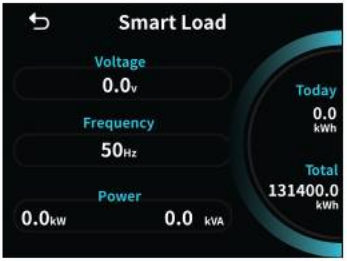	**This is Smart Load detail page.** **Power:** The power consumption of smart load at current time. **Voltage:** The AC voltage on the smart load port of the inverter. **Frequency:** The AC frequency on the smart load port of the inverter. **Today / Total:** Today's and total smart load consumption energy.
	**This is Fault Code page.**

5.4 Setting Menu



This is Setting page, including Application Mode, General setup, and Setup Wizard.

5.4.1 Application Mode

The Application Mode offers a choice of the following five working modes:
Worry-free Backup Power mode, Energy-saving Backup Power mode, Energy-saving mode-Insufficient sunlight mode, Energy-saving mode-sufficient sunlight mode, and SBU.



Option 1: Worry-free Backup Power mode
1.The battery might not be sufficient.
2.Power outages are not acceptable, and it is acceptable to use grid electricity to charge the battery (even if it results in slightly higher electricity costs).

Once this mode is selected, the system will automatically configure itself based on the following settings.
1.Grid Charge: ON
2.TOU: OFF



Option 2: Energy-saving Backup Power
1.The battery is generally sufficient.
2.Power outages are not acceptable, and using grid electricity to charge the battery is also not preferred (to save on electricity costs where possible).

Once this mode is selected, the system will automatically configure itself based on the following settings.
1.Grid Charge: OFF
2.TOU: OFF



Option 3: Energy-saving mode-Insufficient sunlight
1.Solar Power is not enough.
2.Battery capacity is generally sufficient.
3.Hoping to save on electricity bills and can tolerate occasional power outages.

Once this mode is selected, the system will automatically configure itself based on the following settings.
1.Grid Charge: ON.
2.Output Priority: Load First.
3.TOU: ON.
4.TOU Battery Value: 60% SOC.



Option 4: Energy-Saving Mode-Sufficient sunlight
1.Solar Power is enough.
2.Battery capacity is generally adequate.
3.Hoping to save on electricity costs and can accept occasional power outages.

Once this mode is selected, the system will automatically configure itself based on the following settings.
1.Grid Charge: OFF.
2.Output Priority: Load First.
3.TOU: ON.
4.TOU Battery Value: 20% SOC.



Option 5: SBU
1.When the battery is sufficiently charged, the energy storage system disconnects from the gridand supplies power to the loads exclusively.
2.The system automatically re-synchronizes and connects to the grid when the battery level drops below a set threshold.

Once this mode is selected, the system will automatically configure itself based on the following settings.
1.SBU: ON.
2.Grid Start Charge: 20% SOC.
3.Grid End Charge: 60% SOC.

5.4.2 General setup



This is General setup, including eight items: Basic Setup, Battery Setup, Grid Setup, Gen PORT Setup, Work Mode, Advanced Function, Parallel Setup, and History Fault.
Swipe up and down on the screen to switch options.

① **Basic Setup**



This is Basic Setup page
Time: To set the local day and time for the inverter.
12H/24H: Choose between 12-hour or 24-hour display time. Default：24H.
Time Sync: After enabling, when the inverter is communicating with the cloud platform via data logger, the inverter will keep the time in sync with cloud platform automatically. Default：ON.

Setting Lock: Once enabled, the following settings become locked and unconfigurable: Battery Setup, Grid Setup, Gen Port Setup, Work Mode, Advanced Function, and Parallel Setup. Default：OFF.
Beep: Enables or disables the buzzer during fault occurrence. Default：ON.
Auto Dim: When it's enabled, the LCD screen will be dim automatically after 5 minutes of non-operation. Default：ON.
Factory Reset: Reset all parameters of the inverter. It can only be set in standby mode.
Fault Clearing: Clear active fault alarms.
Language: Swipe down on the right side of the screen to set the system language.
Options: English, French, Spanish, Portuguese, Arabic, Burmese. Default：English.

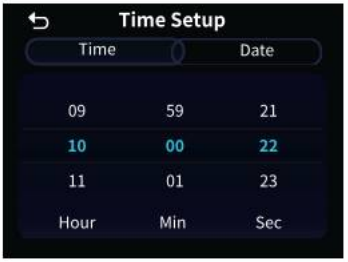	Swiping up and down on the screen can change the selected number to set the current time and date.
	Click the "Factory Reset" option on the "Basic Setup" page, the LCD screen will turn to this page, click "OK" to confirm to restore all the settings of the inverter. click "Cancel" to quit to restore all the settings. The "Factory Reset" is only effective in standby mode.
	Click the "Fault Clearing"option on "Basic Setup" page, the LCD screen will turn to this page, click "OK" to clear current inverter fault. click "Cancel" to quit to clear current inverter fault. The "Fault Clearing" is only effective in standby mode.

②Battery Setup Menu

	**This is Battery Setup page.**
	**Activate Setting:** This feature helps recover a battery that has been over-discharged by slowly charging from the solar array or grid. Default:ON. **Battery Mode:** including three options (Default:Lithium): **Lithium:** Control the charging and discharging process of battery under the condition of the BMS of battery is communicating with the inverter. **Batt V:** Control the charging and discharging process directly through battery voltage. **No Battery:** Tick this item if no battery is connected to the system. **Capacity:** The total capacity of battery connected to this system, it can be used to calculated the SOC of battery bank under the "Batt SOC" mode. Default: 300Ah. **Max Charge:** Max battery charging current. Default: 60A. **Max Disharge:** Max battery discharging current. Default: 135A. For AGM and flooded batteries, it is recommended to use battery capacity (Ah) × 20% as the charge/discharge current. For Lithium, we recommend Ah battery size x 50%= Charge/Discharge amps. For Gel, follow manufacturer's instructions.

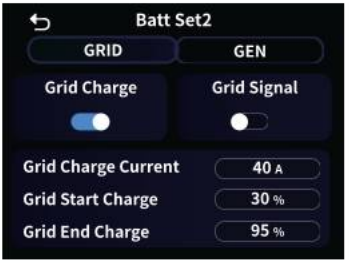



The parameters on GRID row are valid when it's going to use AC power from the Grid port to charge the battery.
The parameters (except Gen Force) on the GEN row are valid when using AC power from the GEN port to charge the battery.

Grid Charge: It's allowed to absorb AC power from the grid port to charge the battery. Default: ON.
Grid Signal: When a generator is connected to the grid port of hybrid inverter, this "Grid signal" can be used to control the dry contact to start or stop the generator. Default: OFF.
Grid Charge Current: The maximum charging current allowed when only use AC power from the grid port to charge the battery. Default: 40A;
Grid Start Charge: When battery SOC or voltage drops to this set value, the inverter will auto start charge the battery from the grid port. Default: 30% SOC or 49V.
Grid End Charge: When the battery SOC or voltage reaches this set value, the inverter will end charge the battery from the grid port. Default: 95% SOC or 54V.
NOTE:"Grid Start Charge" and "Grid End Charge" are only effective when both the "Grid Signal" and "Gen connect to grid input" are active. This is intended for scenarios where the generator is connected to the grid port.

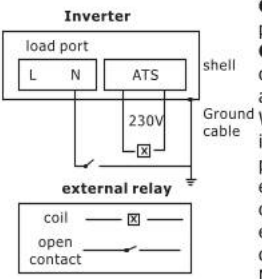

Gen Charge: It's allowed to absorb AC power from the GEN port to charge the battery. Default: OFF.
Gen Signal: When conditions are sufficient, the inverter will close or open the normally open relay used to control the start and stop of the generator. When"Gen Charge" and "Gen Signal" are enabled and the inverter operates in on-grid mode, the output voltage of the ATS port will be near 0V. When "Gen Charge" and "Gen Signal" are enabled and the inverter operates in off-grid mode, the ATS port outputs approximately 230 V. With this feature and installed external NO type relay, this inverter can automatically disconnect or connect the N and PE terminals of the load port. More details, please refer to left side picture. Default: ON.

Gen Force: When the generator is connected, it is forced to start the generator without meeting other conditions. Default: OFF.
Gen Charge Current: The maximum charging current allowed when only use AC power from the GEN port to charge the battery. Default: 40A.
Gen Start Charge: When battery SOC or voltage drops to this set value, the inverter will auto start charge the battery from the GEN port. Default: 30% SOC or 49V.
Gen End Charge: When the battery SOC or voltage reaches this set value, the inverter will end charge the battery from the GEN port. Default: 95% SOC or 54V.



When the "Lithium" mode is selected, The content on the "Batt Set 3" page is shown in the figure on the left.

Lithium Mode: This is the BMS communication protocol code which can be confirmed on the "Approved Battery list" based on the battery model you are using. Default: 0.

Shutdown: Be valid in off-grid mode, battery can discharge to this SOC, then the DC/AC inverter module of this inverter will be shut down and the solar power can only be used to charge the battery. Default: 10% SOC.

Low Batt: Be valid in on-grid mode, when the "Grid charge" has been checked, the battery SOC will remain above the set value of "Low Batt". Default: 20% SOC.

Restart: Be valid in off-grid mode, after the DC/AC inverter module of this inverter is shut down, the PV power can only be used to charge the battery. After the battery SOC has resumed to this "Restart" value, the DC/AC inverter module will restart to output AC power. Default: 40% SOC.



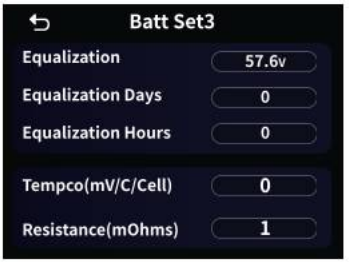

When the "Batt V" mode is selected, the content on the "Batt Set3" page is shown as the figure above.

Three-stage charging strategy for lead-acid and non-compatible lithium batteries.
If you are not familiar with these parameters, please keep the default values.
Float: The charging voltage during floating charging stage. Default: 55.2V.
Absorption: The charging voltage during absorption charging stage. Default: 57.6V.
Low Batt: Be valid in on-grid mode, when the "Grid charge" has been checked, the battery voltage will remain above the set value of "Low Batt". Default: 47.5V.
Shut down: Be valid in off-grid mode, when battery voltage drop to this value, then the DC/AC inverter module of this inverter will be shut down and the solar power can only be used to charge the battery. Default: 46V.
Restart: Be valid in off-grid mode, after the DC/AC inverter module of this inverter is shut down, the PV power can only be used to charge the battery. When the battery voltage has returned to this "Restart" value, the DC/AC inverter module will restart to output AC power. Default: 52V.
Equalization: When charging multiple battery modules or cells in series, the set charging voltage to ensure that the voltage of each battery module or cell is equal after fully charged. Default: 57.6V.
Equalization Days: Time interval for conducting equalization charging. Default: 0 days.
Equalization Hours: The duration of each equalization charging. Default: 0 hours.
Tempco: The coefficient by which the voltage of a battery varies with temperature. Default: 0 mV/C/Cell.
Resistance: The internal resistance of a battery refers to the opposition to current flow within the battery during operation. Default: 1 mOhms.

Recommended battery settings

Battery Type	Absorption Stage	Float Stage	Equalization Voltage (every 30 days for 3 hours)
AGM (or PCC)	14.2V (57.6V)	13.4V (53.6V)	14.2V (57.6V)
Gel	14.1V (56.4V)	13.5V (54.0V)	
Wet	14.7V (59.0V)	13.7V (55.0V)	14.7V (59.0V)
Lithium	Follow its BMS voltage parameters		

③Grid Setup Menu



Grid Mode: Set grid input voltage range, optional: APL,UPS. Default: APL. It can only be set in standby mode.
Inv Output Voltage: Set the rated output voltage of the inverter, optional: 220V, 230V, 240V. Default: 230V.
Inv Output Frequency: Set according to the grid frequency in on-grid mode or the frequency required by the load in off-grid mode. optional:50Hz, 60Hz. Default: 50Hz.
Input Current Limit: Set the maximum input current of grid port. Default: 35.5A.
Input Power Limit: Set the maximum input power of grid port. Default: 8050W.

④Gen Port Setup Menu



GEN port is a multifunctional port, but you can only choose one of the following two functions at a time (Gen Input, SmartLoad Output). It can only be set in standby mode.

Gen Input:
Port Type: Choose type of GEN port, optional: Gen Input, SmartLoad Output. Default: Gen Input.
Gen connect to grid input: Connect the generator to the grid input port of the the inverter. Default: OFF.
Rated Power: The maximum input power allowed from generator. Default: 8000W.

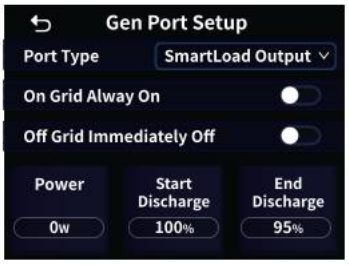

SmartLoad Output:
On Grid Alway On: When click "On Grid Alway On", the smart load will switch on when the grid is present. Default: OFF.
Off Grid immediately off: The smart load will stop working immediately when the grid is disconnected if this item is active. Default: OFF.

Power: Set the PV power for Smart Load Port switch-on. Default: 0W. (The PV power setting is only effective in on-grid mode. Set to 0W means the smart load output is not limited by PV power. This setting is not effective in off-grid mode.)

Start Discharge: Set the battery SOC/voltage for Smart Load Port switch-on. Default: 100% SOC or 54V.
End Discharge: Set the battery SOC/voltage for Smart Load Port switch-off. Default: 95% SOC or 51V.
e.g. Power=500W, Start Discharge=100%, End Discharge=95%. When the PV power exceeds 500W, and battery bank SOC reaches 100%, Smart Load Port will switch on automatically and power the load connected. When the battery bank SOC< 95% or PV power <500W, the Smart Load Port will switch off automatically.
NOTE: When the conditions for the Smart load output are met, wait for 1 minute, and then the Smartent load will output.

⑤Work Mode Setup Menu



Zero Export To Load: The AC output power will only supply the backup load and smart load(if any). The inverter neither supplies power to home loads nor exports power to the grid. The built-in CT will detect the power flowing back to the grid port, and then the inverter will adjust its AC output power based on the detected value to prevent AC current from being output from the grid port of the inverter. Default: ON.

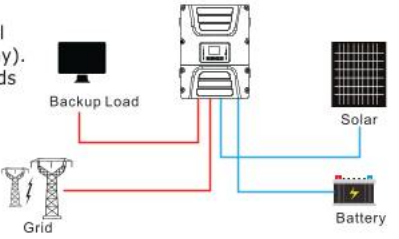

Zero Export To CT: The AC output power of the inverter will not only be used to supply the backup loads connected but also supply power to the home loads and smart loads(if any) connected. If PV power and battery power is insufficient, it will take grid power as supplement. The inverter will not sell power to grid. In this mode, an external CT/meter is needed, the external CT/meter will detect power flowing back to the grid, and then the inverter will adjust its output AC power based on the detected value. Default: OFF.

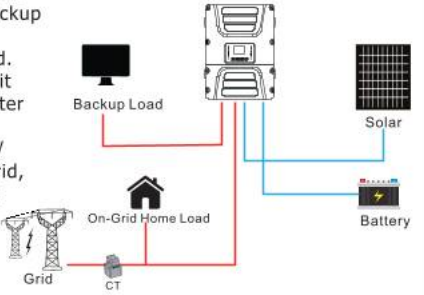



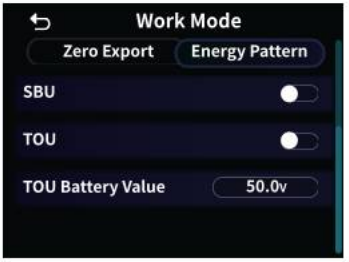

Energy pattern

Output Priority: Priority of PV power usage. When "Grid charge" is enabled, the default energy pattern is "Load First",this setting will be invalid.

Batt First: PV power is firstly used to charge the battery and then used to power the load. If PV power is insuffcient, grid will make supplement for battery and load simultaneously.

Load First: PV power is firstly used to power the load and then used to charge the battery. If Pvpower is insuffcient, grid will make supplement for battery and load simultaneously.

Max Solar Power: The maximum PV input power allowed. Default: 9600W.

Grid Peak Shaving: When active, the inverter limits the AC power drawn from the grid. Default: OFF.

Grid Peak Shaving PWR: Set this value to limit the AC power from the grid. If the grid peak shaving power plus PV power plus battery power cannot meet the power consumption of the load, the grid peak shaving will be invalid, and the power taken from the grid can exceed this set value. Default: 8000W.

SBU: Turn on or off the SBU mode. Default:OFF;

Turn on the SBU mode, the inverter will disconnect from the grid and supply power to the load only from PV and the battery. When the battery level drops below the "Grid Start Charge" value, it will reconnect to the grid to start charging. Once the battery is charged above the "Grid End Charge" value, it will disconnect from the grid again.

To turn on the SBU mode, the TOU function must be turned off.

TOU: Turn on or off the TOU function. Default: OFF;

TOU Battery Value: Set the battery charge/discharge voltage or SOC value under the TOU function. Default: 50% SOC or 50V.

⑥Advanced Function Setup Menu



BMS Err Stop: When it is active, if the battery BMS failed to communicate with inverter, the inverter will stop working and report fault. Default: OFF.
ATS Enable: Enable the ATS function. Default: OFF.
Low Noise Mode: In this mode, the sound emitted by the inverter during operation will be smaller. Default: OFF.
Low Power Mode: When it's selected and battery SOC/voltage is less than "Low Bat" value, the self-consumption power of inverter will supply by grid and battery simultaneously. If unselected, the self consumption power of inverter will supply by battery. Default: OFF.
Backup Delay: When the grid cuts off, the inverter will output power after this set time. Default: 0ms.



MPPT Multi Point: The inverter will check whether the PV is working on its Max.power point. If not, then it will adjust the voltage of MPPT to ensure the PV operates at the Max.power point. Default: OFF.
Export Power Limit: It is used to setup the maximum output power allowed to flow to grid. Default: 6000W.
Grid upper limit: Set the grid voltage upper limit. Default：264V.
Grid Lower limit: Set the grid voltage lower limit. Default：90V.

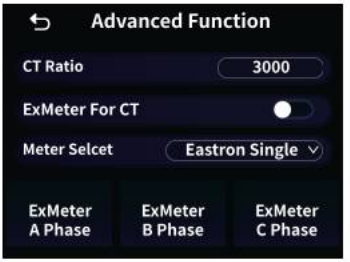

CT Ratio: The ratio of CT rated primary current to rated secondary current. It can only be set in standby mode. Default: 3000:1.
ExMeter For CT: Enable this function when using "Zero Export to CT" mode and replace the CTs with an external smart meter. Default：OFF.
Meter Select: select the corresponding meter type according to the meter installed in the system. Default：Eastron single.
ExMeter A/B/C Phase: When the inverter is installed in a three-phase grid and measured by a three-phase smart meter, select the corresponding phase to which the inverter is connected. For example, when the hybrid inverter connects to A phase of grid, please click A Phase here.

⑦Parallel Setup Menu



Parallel: Enable this function when several inverters of the same model are connected in parallel. Default: OFF.
Master/Slave: Select each of inverter in the parallel system as the master or slave inverter, and the master inverter needs to manage the working mode of the parallel system. Default：Slave.
For single-phase parallel systems, set one inverter as the master. For three-phase parallel systems, each phase requires setting one unit as the master.
Parallel Phase: When forming a three-phase system in parallel, it is necessary to set which phase of the three-phase system this inverter belongs to. Default：A phase.
Parallel ID: The parallel ID of each inverter in the parallel system should be different. Default：0.

⑧History Fault Menu



This page is used to record the historical faults of inverter, with a maximum of ten entries.
For detailed information, please refer to the "Warning code" and "Fault code" in the manual.

5.4.3 Setup Wizard

Click Back to return to the previous setting, NEXT to proceed to the next setting, or Cancel to exit setup and go to the main screen.

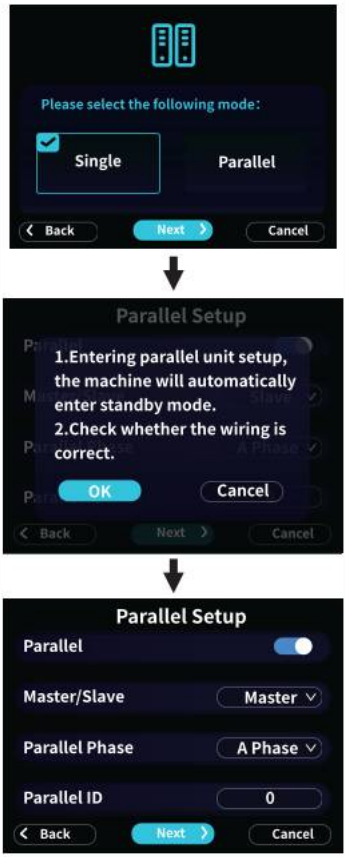

Step 1: Select Single or Parallel Mode.

- Select Single and click NEXT to proceed to the Time Setup.
- Select Parallel and click NEXT to proceed to the Parallel Setup.

Parallel Setup:

Parallel: Enable this function when several same model inverters are connecting in parallel. Default: OFF

Master/Slave: Select any inverter in the parallel system as the master or slave inverter, and the master inverter needs to manage the working mode of the parallel system. Default: Slave.

For single-phase parallel systems, set one unit as the master.

For three-phase parallel systems, each phase requires setting one unit as the master.

Paralel Phase: When forming a three-phase system in parallel, it is necessary to set which phase of the three-phase system this inverter belongs to. Default: A phase.

Paralel ID: The parallel ID of each inverter in the parallel system should be different. Default: 0.



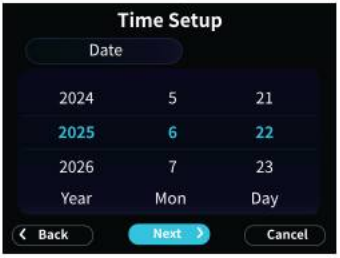

Step 2: Time Setup
Swiping up and down on the screen can change the selected number to set the current time and date.



Step 3: Batt Setup
Battery Mode: including three options (Default: Lithium):
Lithium: Control the charging and discharging process of battery under the condition of the BMS of battery is communicating with the inverter.
Batt V: Control the charging and discharging process directly through battery voltage.
No Battery: Tick this item if no battery is connected to the system.

Max Charge: Max battery charging current. Default: 60A.
Max Disharge: Max battery discharging current. Default: 135A.
For AGM and Flooded, we recommend Ah battery size x 20% = Charge / Discharge amps. For Lithium, we recommend Ah battery size x 50% = Charge/ Discharge amps.
For Gel, follow manufacturer's instructions.





Step 4:Whether to connect the Generator?

- Click YES to proceed to the GEN Setup.
- Click No to proceed to the Application Mode setup.

GEN Setup

Gen charge: It's allowed to absorb AC power from the GEN port to charge the battery. Default: OFF.
Gen signal: When conditions are sufficient, the inverter will close or open the normally open relay used to control the startand stop of the generator. Default: ON.
Rated Power: The maximum input power allowed from generator. Default: 8000W.
Gen Charge Current: The maximum charging current allowed when only use AC power from the GEN port to charge the battery. Default: 40A.
Gen Start Charge: When battery SOC or voltage drops to this set value, the inverter will auto start charge the battery from the GEN port. Default: 30% SOC or 49V.
Gen End charge: When the battery SOC or voltage reaches this set value, the inverter will end charge the battery from the GEN port. Default: 95% SOC or 54V.



Step 5: Application Mode

For details on the Application Mode, please refer to the previous section.

Click "Finish" to save all settings.

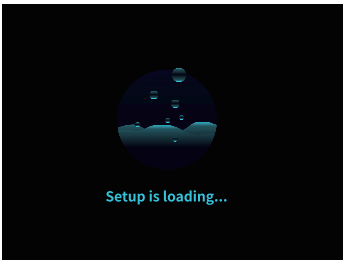 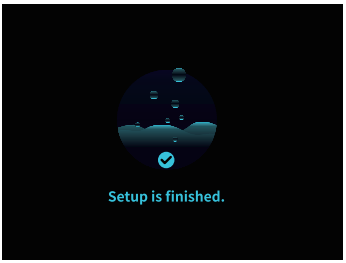	After waiting ten seconds, the setup will be completed.

6. Mode

Mode I: Zero Export to Load

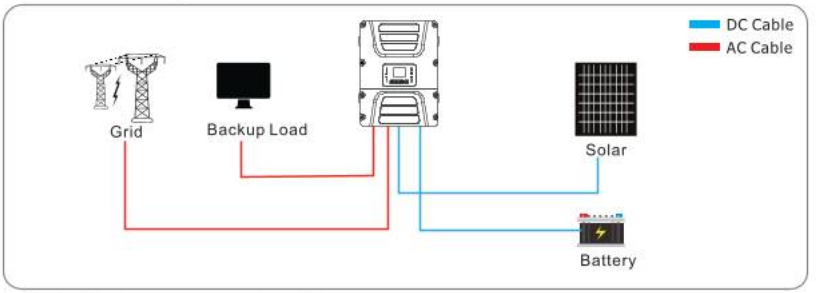

Mode II: Zero export to CT

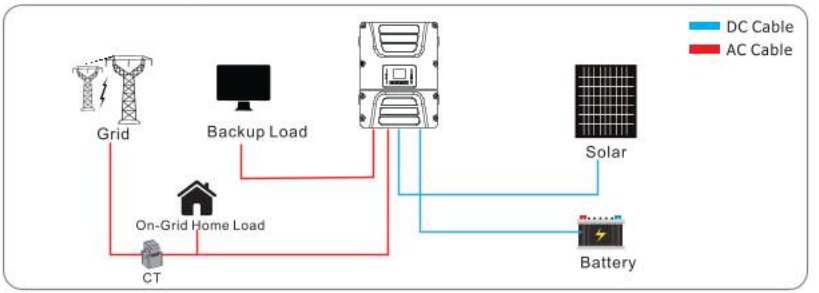

Mode III: Off-grid

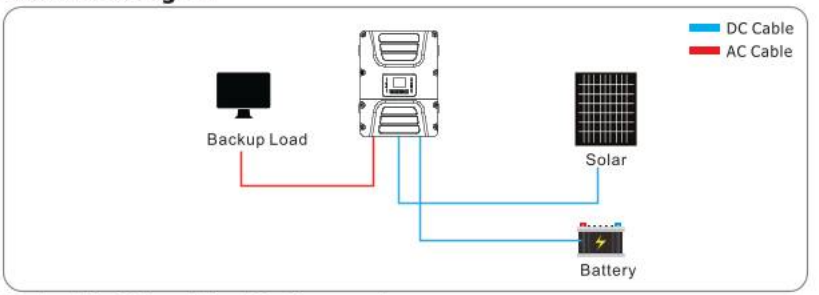

Mode IV: Off-grid with Generator

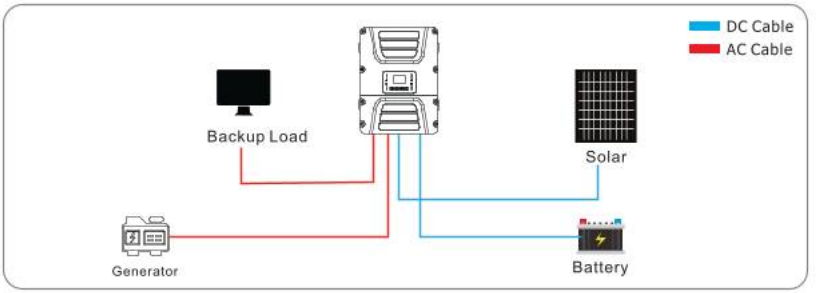

Mode V: On-grid with generator

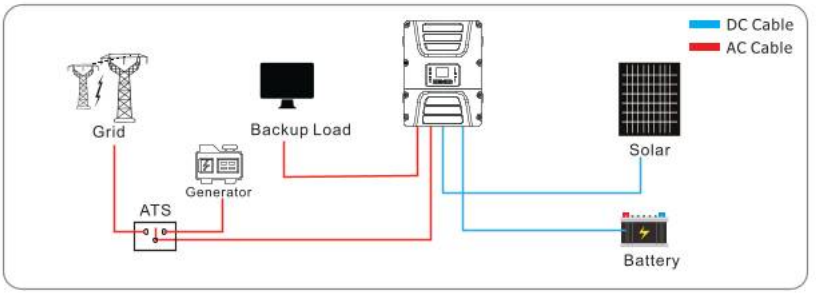

The 1st priority power of the system is always the PV power, then 2nd and 3rd priority power will be the battery bank or grid according to the settings. The generator (if any) will serve as the last power backup source.

7. Fault information and processing

7.1 Preparations for Installation

The energy storage inverter is designed according to the grid-connected operation standard and meets the safety requirements and electromagnetic compatibility requirements. Before leaving the factory, the inverter undergoes several rigorous tests to ensure that the inverter can operate reliably.

Note

If your inverter shows the Fault Code and the fault persists after restarting, please contact your local dealer or service center. You need to prepare the following information.

1. Inverter serial number;
2. Distributor or service center of the inverter ;
3. On-grid power generation date;
4. Please describe the problem in as much detail as possible (including the fault code and indicator light status). To help you understand the inverter's fault information more clearly, we will list all possible fault codes and their descriptions when the inverter is not functioning properly.
5. Your contact information.

7.2 Warning Code

Warning Code	Warning information	Trouble Shooting
W21	BMS communication alarm	Abnormal communication between battery and inverter in lithium mode,check battery and inverter
W22	Low Battery	Battery voltage is too low or Battery SOC is too low, the battery should be charged.
W33	Grid abnormal alarm	Please check whether the voltage, frequency, and phase sequence of the Grid port are normal
W37	Grid Loss Phase Alarm	Grid phase loss detected. Please check the wiring connections.
W38	Grid Reversed Alarm	In three-phase parallel operation mode, adjust the grid wiring to clear the alarm.
W48	Backup overload alarm	The load is overloaded and should be reduced.
W57	Gen abnormal alarm	Please check whether the voltage, frequency, and phase sequence of the Gen port are normal
W61	Gen Loss Phase Alarm	Gen phase loss detected. Please check the wiring connections.
W62	Gen Reversed Alarm	In three-phase parallel operation mode, adjust the gen wiring to clear the alarm.
W67	Gen over load alarm	Please check whether the load on backup port is within the generator specifications.
W83	Radiator over-temperature derating alarm	The inverter will reduce power if the heat sink temperature is too high.
W86	Fan failed alarm	Fan malfunction, check fan for proper functioning

7.3 Fault Code

Fault Code	Fault information	Trouble Shooting
F1	PV1 over voltage fault	1.Please check the PV string voltage and reduce the number of PV modules in series if necessary. 2.Restart the unit, if the fault still exists, please contact us for help.
F2	PV2 over voltage fault	1.Please check the voltage of the string, reduce the number of PV2 modules in series. 2.Restart the unit, if the fault still exists, please contact us for help.
F5	PV1 over current fault	1.The current of the PV1 modules is too large, please check the string current; 2.Restart the unit, if the fault still exists, please contact us for help.
F6	PV2 over current fault	1.The current of the PV2 modules is too large, please check the string current; 2.Restart the unit, if the fault still exists, please contact us for help.
F9	PV1 reverse connection Fault	1.Please check whether the PV1 wring is properly connected; 2.Restart the unit, if the fault still exists, please contact us for help.
F10	PV2 reverse connection Fault	1.Please check whether the PV2 wring is properly connected; 2.Restart the unit, if the fault still exists, please contact us for help.
F18	PV1 short fault	Please check whether the PV1 wring is properly connected.
F19	PV2 short fault	Please check whether the PV2 wring is properly connected.
F25	Battery over voltage fault	1.Please check whether the battery voltage is within the specified range; 2.Check whether Battery cables are firmly and correctly connected; 3.Restart the unit, if the fault still exists, please contact us for help.
F26	Battery over voltage fault of hardware	1.Please check whether the battery voltage is within the specified range; 2.Check whether battery cables are firmly and correctly connected; 3.Restart the unit, if the fault still exists, please contact us for help.
F27	Battery over current fault	Restart the unit, if the fault still exists, please contact us for help.
F28	Battery over current fault of hardware	Restart the unit, if the fault still exists, please contact us for help.
F30	LLC over Current fault	Restart the unit, if the fault still exists, please contact us for help.

Fault Code	Fault information	Trouble Shooting
F31	LLC over Current fault of hardware	Restart the unit, if the fault still exists, please contact us for help.
F32	BMS communication fault	1.Please check whether BMS communication cable is firmly and correctly connected; 2.Restart the unit, if the fault still exists, please contact us for help.
F37	LLC soft start failure	Restart the unit, if the fault still exists, please contact us for help;
F41	BUS software over voltage fault	1.Please check the voltage of the string, reduce the number of PV modules in series; 2.Restart the unit, if the fault still exists, please contact us for help;
F42	BUS hardware over voltage fault	1.Please check the voltage of the string, reduce the number of PV modules in series; 2.Restart the unit, if the fault still exists, please contact us for help;
F43	BUS low Voltage fault	Restart the unit, if the fault still exists, please contact us for help.
F49	INV over current fault	1.Please check whether the load power is within the specified range; 2.Restart the unit, if the fault still exists, please contact us for help.
F50	INV over current fault of hardware	1.Please check whether the load power is within the specified range; 2.Restart the unit, if the fault still exists, please contact us for help.
F51	INV soft start failure	Restart the unit, if the fault still exists, please contact us for help.
F52	INV voltage DC component fault	Restart the unit, if the fault still exists, please contact us for help.
F53	INV current DC component fault	Restart the unit, if the fault still exists, please contact us for help.
F54	INV over voltage fault	Restart the unit, if the fault still exists, please contact us for help.
F55	INV low voltage fault	1.Please check whether the load power is within the specified range; 2.Restart the unit, if the fault still exists, please contact us for help.
F56	INV short fault	1. Please check whether the backup connection is firm and correct; 2.Restart the unit, if the fault still exists, please contact us for help.

Fault Code	Fault information	Trouble Shooting
F57	Grid overload fault	1.Please check whether the load power is within the specified range; 2.Restart the unit, if the fault still exists, please contact us for help.
F58	Backup overload fault	1.Please check whether the load power is within the specified range; 2.Restart the unit, if the fault still exists, please contact us for help.
F65	Heatsink over temperature fault	1.Please check whether the work environment temperature is too high; 2.Turn off the inverter for 15mins and restart; 3.Seek help from us, if can not go back to normal state.
F66	Ambient over temperature fault	1.Please check whether the work environment temperature is too high; 2.Turn off the inverter for 15mins and restart; 3.Seek help from us, if can not go back to normal state.
F67	Main and auxiliary DSP communication fault	Restart the unit, if the fault still exists, please contact us for help.
F68	DSP and MCU communication fault	Restart the unit, if the fault still exists, please contact us for help.
F69	Eeprom fault	Restart the unit, if the fault still exists, please contact us for help.
F70	AC leakage current sensor fault	Restart the unit, if the fault still exists, please contact us for help.
F71	AC leakage current fault	Restart the unit, if the fault still exists, please contact us for help.
F72	Grid Relay fault	Restart the unit, if the fault still exists, please contact us for help.
F73	Grid Relay short fault	Restart the unit, if the fault still exists, please contact us for help.
F74	INV Relay fault	Restart the unit, if the fault still exists, please contact us for help.
F76	GEN Relay fault	Restart the unit, if the fault still exists, please contact us for help.
F77	PV Insulation impedance fault	PV isolation resistance is too low 1.1. Please check whether the connections between PV panels and the inverter are firm and correct; 2.Check whether the PE cable of inverter is connected to ground; 3.Seek help from us, if can not go back to normal state.
F78	Grid wrong connect to backup port	1.Please check whether the backup cables are firmly and correctly connected; 2.Restart the unit, if the fault still exists, please contact us for help.

Fault Code	Fault information	Trouble Shooting
F79	Generator port wrong connect	1.Generator port is connected to the generator or Grid whenthe mode is the smartload mode, Check whether GEN cables are firmly and correctly connected; 2.Restart the unit, if the fault still exists, please contact us for help.
F81	Auxpower fault	Restart the unit, if the fault still exists, please contact us for help.
F82	NTC open circuit fault	Restart the unit, if the fault still exists, please contact us for help.
F86	System parameters change	Grid or battery setting changed; the system will restart after 20 ms.
F88	Parallel other model fault	1.Please check whether other inverter is in error state; 2.Restart the system, If the fault still exists, please contact us for help.
F89	Parallel CAN communication fault	1.Please check whether the parallel cables are firmly and correctly connected; 2.Restart the system, If the fault still exists, please contact us for help.
F90	Parallel master lost	1.Please check whether the parallel cables are firmly and correctly connected; 2.Restart the system, If the fault still exists, please contact us for help.
F91	Parallel zero sync signal lost	1.Please check whether the parallel cables are firmly and correctly connected; 2.Restart the system, If the fault still exists, please contact us for help.
F92	Parallel Version mismatch	1.Please check whether the software version of the inverter is same; 2.Restart the system, If the fault still exists, please contact us for help.
F93	Parallel Setting mismatch	1.Please check whether the parallel cables are firmly and correctly connected; 2.Check whether the software version of the inverter is same;
F94	Parallel ID conflict	1.Please check whether the CAN ID of different inverters is same; 2.Please check whether there are two masters in one phase;
F95	Parallel PWM sync signal fault	1.Please check whether the parallel cables are well-connected. 2.Restart the system, If the fault still exists, please contact us for help.
F96	Parallel system wiring fault	1.Please check whether the qrid wires are well-connected; 2.Please check whether the grid phase sequence is correct; 3.Restart the system, If the fault still exists, please contact us for help.

Under the guidance of our company, customers return our products so that our company can provide service of maintenance or replacement of products of the same value. Customers need to pay the necessary freight and other related costs. Any replacement or repair of the product will cover the remaining warranty period of the product. If any part of the product or product is replaced by the company itself during the warranty period, all rights and interests of the replacement product or component belong to the company.

Factory warranty does not include damage due to the following reasons:

· Damage during transportation of equipment ;

· Damage caused by incorrect installation or commissioning ;

· Damage caused by failure to comply with operation instructions, installation instructions or maintenance instructions ;

· Damage caused by attempts to modify, alter or repair products ;

· Damage caused by incorrect use or operation ;

· Damage caused by insufficient ventilation of equipment ;

· Damage caused by failure to comply with applicable safety standards or regulations ;

· Damage caused by natural disasters or force majeure (e.g. floods, lightning, overvoltage, storms, fires, etc.)

In addition, normal wear or any other failure will not affect the basic operation of the product. Any external scratches, stains or natural mechanical wear does not represent a defect in the product.

8.Limitation of Liability

In addition to the product warranty described above, the state and local laws and regulations provide financial compensation for the product's power connection (including violation of implied terms and warranties). The company hereby declares that the terms and conditions of the product and the policy cannot and can only legally exclude all liability within a limited scope.

9. Datasheet

Model	IVAM6048P1G1
Battery Input Data	
Battery Type	Lead-acid or Lithium-ion
Battery Voltage Range(V)	40~60
Max. Charging Current(A)	135
Max. Discharging Current(A)	135
Charging Strategy for Li-Ion Battery	Self-adaptation to BMS
Number of Battery Input	1
PV String Input Data	
Max. PV access power(W)	12000
Max. PV Input Power(W)	9600
Max. PV Input Voltage(V)	500
Start-up Voltage(V)	120
PV Input Voltage Range(V)	90~500
MPPT Voltage Range(V)	90~425
Full Load MPPT Voltage Range(V)	300~425
Rated PV Input Voltage(V)	370
Max. Operating PV Input Current(A)	20+20
Max. Input Short-Circuit Current(A)	27+27
No. of MPP Trackers/No. of Strings MPP Tracker	2/1+1
Max. Inverter Backfeed Current to The Array(A)	0
AC Output Data	
Rated AC Output Power(VA/W)	6000
Max. AC Output Power(VA/W)	6000
Max. AC Output Current(A)	26.1
Peak Power(W)	2 times of rated power, 10s
Rated Output Voltage(V)	230
Output Type	L+N+PE
Rated Output Frequency	50Hz/60Hz
Output Voltage Waveform	Pure Sine Wave
Total Current Harmonic Distortion THDi	<3%
AC Input Data(Grid and Generator)	
Max. Input Power to Battery(W)	6000
Rated Input Voltage(V)	230
Rated Input Frequency	50Hz/60Hz
Grid Input Current(A)	35
Generator Input Current(A)	35

Efficiency	
Max. Efficiency	97.60%
Euro Efficiency	96.50%
MPPT Efficiency	>99%
Equipment Protection	
AC Output Overvoltage Protection	Yes
AC Output Short Circuit Protection	Yes
AC Output Overcurrent Protection	Yes
DC Polarity Reverse Connection Protection	Yes
Thermal Protection	Yes
DC Terminal Insulation Impedance Monitoring	Yes
DC Component Monitoring	Yes
Ground Fault Current Monitoring	Yes
Arc fault circuit interrupter (AFCI)	Optional
Power Network Monitoring	Yes
Earth Fault Detection	Yes
DC Input Switch	Yes
Overvoltage Load Drop Protection	Yes
Surge Protection Level	TYPE II(DC), TYPE II(AC)
Interface	
Display	LCD+LED
Communication Interface	RS485, CAN
Monitor Mode	WIFI/LAN(optional)
General Data	
Operating Temperature Range	-40 to +60°C, >45°C Derating
Permissible Ambient Humidity	0-100%
Permissible Altitude	3000m
Noise	<55 dB
Ingress Protection(IP) Rating	IP65
Inverter Topology	Non-Isolated
Over Voltage Category	Over-voltage Category II (DC), Category III (AC)
Warranty	5 Years
Type of Cooling	Intelligent Air Cooling
Net Weight	13. 5kg
Product Dimension	320x435x183mm
Package Dimension	412x532x270mm
Safety EMC/Standard	IEC/EN 61000-6-1/2/3/4, IEC/EN 62109-1, IEC/EN 62109-2

10. Appendix I

Definition of RJ45 Port Pins for BMS

No.	BMS 485/CAN Pin
1	/
2	/
3	CAN-L
4	CAN-H
5	BMS-485_B
6	BMS-485_A
7	/
8	/

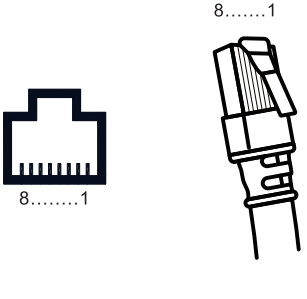

Definition of RJ45 Port Pin for Meter

No.	Meter Pin
1	/
2	/
3	Meter-485-B
4	/
5	/
6	Meter-485-A
7	Meter-485-B
8	Meter-485-A

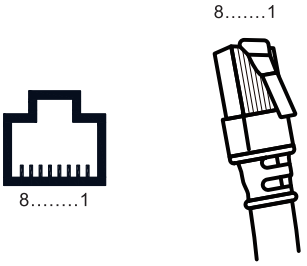

Definition of RJ45 Port Pins for "Modbus Port" (remote monitoring)

No.	Modbus Pin
1	DEBUG-485_B
2	DEBUG-485_A
3	/
4	DEBUG-485_B
5	DEBUG-485_A
6	/
7	/
8	/

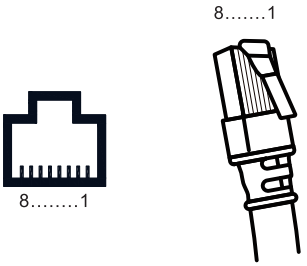

11. The Wi-Fi operation Guide in APP

11.1 Introduction

Wireless communication between the off-grid inverter and theAPP can be realized through the Wi-Fi module.The APP supports Android and iOS devices.

Delivers device status during normal operation.
Allows device Settings to be configured on the APP.
Notifies users when a warning or alarm occurs.
Allows users to query inverter history data.



The status of the Wi-Fi sign on the LCD display.
After the APP is successfully connected,Wi-Fi indicator light remains constantly on.

11.2 Download and install APP

Operating system requirement for your smart phone:

iOS system supports iOS 11.0 and above

Android system supports Android 5.0 above

APP Download
Please scan the following QR code with your smartphone to download the App.

The QR code supports Android system and iOS system

Operation Manual
Please scan the following QR code with your smartphone to view the App Operation Manual

The QR code supports Android system and iOS system

Guangzhou Felicity Solar Technology Co., Ltd.

✉ Email:sales@felicitysolar.com

🌐 Web: www.felicitysolar.com

📍 Add: (Airport Baiyun)No.2, 4, 6, 8, 10 and 12 Donghua Huaye Road, Renhe Town, Baiyun District, Guangzhou, Guangdong, P. R. China

358-010517-00